DAV-S500/S800

SERVICE MANUAL

Ver 1.0 2001. 07

US Model
Canadian Model
Chinese Model
DAV-S500

AEP Model
UK Model
Australian Model
E Model
DAV-S500/S800

- DAV-S500/S800 are composed of following models. As for the service manual, it is issued for each component model, then, please refer to them.

COMPONENT MODEL NAME

	DAV-S500	DAV-S800
COMPACT DISC DECK RECEIVER SYSTEM	HCD-S500	HCD-S800
FRONT SPEAKER SYSTEM	SS-TS500	SS-TS550
CENTER SPEAKER SYSTEM	SS-RS500	SS-CT550
REAR SPEAKER SYSTEM	SS-RS500	SS-RS550
SUBWOOFER SPEAKER SYSTEM	SS-WS500	SS-WS550

- Abbreviation
  AUS : Australian model
  E32 : 110-240V AC area in E model
  EA : Saudi Arabia model
  HK : Hong Kong model
  MY : Malaysia model
  SP : Singapore model

PARTS LIST

Part No.	Description	Remarks
1-476-784-11	REMOTE COMMANDER (RM-SS800)	
1-573-291-11	CONNECTOR, CONVERSION	
⚠1-569-008-21	ADAPTOR, CONVERSION 2P (E32, SP, MY, EA)	
1-754-060-11	ANTENNA (FM)	
1-754-149-11	LOOP ANT (AM)	
1-769-108-11	CORD, CONNECTION (VIDEO)	
⚠1-770-019-11	ADAPTOR, CONVERSION PLUG 3P (UK, HK)	
1-792-388-14	CORD (WITH CONNECTOR) (RED, 5m) (S500)	
1-792-388-24	CORD (WITH CONNECTOR) (BLK, 5m) (S500)	
1-792-388-34	CORD (WITH CONNECTOR) (WHT, 5m) (S500)	
1-792-388-44	CORD (WITH CONNECTOR) (YEL, 15m) (S500)	
1-792-388-54	CORD (WITH CONNECTOR) (BLU, 15m) (S500)	
1-792-388-64	CORD (WITH CONNECTOR) (GRN, 5m) (S500)	
1-823-352-11	CORD (WITH CONNECTOR) (RED, 5m) (S800)	
1-823-352-21	CORD (WITH CONNECTOR) (PURPLE, 5m) (S800)	
1-823-352-31	CORD (WITH CONNECTOR) (WHT, 5m) (S800)	
1-823-352-41	CORD (WITH CONNECTOR) (GRY, 15m) (S800)	
1-823-352-51	CORD (WITH CONNECTOR) (BLU, 15m) (S800)	
1-823-352-61	CORD (WITH CONNECTOR) (GRN, 5m) (S800)	
4-235-055-01	COVER, BATTERY (FOR RM-SS800)	
4-235-681-11	MANUAL, INSTRUCTION (ENGLISH) (S500)	
4-235-681-21	MANUAL, INSTRUCTION (FRENCH) (S500)	
4-235-681-31	MANUAL, INSTRUCTION (SPANISH) (S500)	
4-235-681-41	MANUAL, INSTRUCTION (CHINESE) (S500)	
4-235-681-51	MANUAL, INSTRUCTION (ARABIC) (S500)	
4-235-681-61	MANUAL, INSTRUCTION (KOREAN) (S500)	
4-235-681-71	MANUAL, INSTRUCTION (PORTUGUESE) (S500)	
4-236-189-11	MANUAL, INSTRUCTION (ENGLISH) (S800)	
4-236-189-21	MANUAL, INSTRUCTION (FRENCH) (S800)	
4-236-189-31	MANUAL, INSTRUCTION (GERMAN, SPANISH, DUTCH, SWEDISH, ITALIAN, POLISH) (S800)	
4-236-189-41	MANUAL, INSTRUCTION (DANISH, FINNISH, PORTUGUESE) (S800)	
4-236-189-51	MANUAL, INSTRUCTION (ARABIC) (S800)	
4-236-189-61	MANUAL, INSTRUCTION (RUSSIAN) (S800)	
4-236-189-71	MANUAL, INSTRUCTION (CHINESE) (S800)	
4-236-526-11	MANUAL, INSTRUCTION (ENGLISH) (S500)	
4-236-526-21	MANUAL, INSTRUCTION (FRENCH) (S500)	
4-236-526-31	MANUAL, INSTRUCTION (GERMAN, SPANISH, DUTCH, SWEDISH, ITALIAN, POLISH) (S500)	
4-236-526-41	MANUAL, INSTRUCTION (DANISH, FINNISH, PORTUGUESE) (S500)	
4-236-887-01	CUSHION (FOR SS-RS500/TS500)	

The components identified by mark ⚠ or dotted line with mark ⚠ are critical for safety. Replace only with part number specified.	Les composants identifiés par une marque ⚠ sont critiques pour la sécurité. Ne les remplacer que par une pièce portant le numéro spécifié.	以阴影和 ⚠ 标志来识别的零部件，在安全方面具有关键性，因此只能以规定号码的零部件来更换。

COMPACT AV SYSTEM

9-873-259-01
2001G1600-1
© 2001.7

Sony Corporation
Home Audio Company
Shinagawa Tec Service Manual Production Group

SONY®

REVISION HISTORY

Clicking the version allows you to jump to the revised page.
Also, clicking the version at the upper right on the revised page allows you to jump to the next revised page.

Ver.	Date	Description of Revision
1.0	2001.07	New

HCD-S500/S800

SERVICE MANUAL

Ver 1.8 2004.08

US Model
Canadian Model
HCD-S500
AEP Model
UK Model
E Model
Australian Model
HCD-S500/S800

Photo : HCD-S500

HCD-S500/S800 are the amplifier, DVD/CD and tuner section in DAV-S500/S800.

Model Name Using Similar Mechanism	NEW
Mechanism Type	CDM-55D-DVBU8
Base Unit Name	DVBU8
Optical Pick-up Name	KHM-240AAA

SPECIFICATIONS

AUDIO POWER SPECIFICATIONS

POWER OUTPUT AND TOTAL HARMONIC DISTORTION:
With 6 ohm loads, both channels driven, from 120 – 10,000 Hz; rated 40 watts per channel minimum RMS power, with no more than 10 % total harmonic distortion from 250 milliwatts to rated output.

Amplifier section

S500 MODEL

Stereo mode	40 W + 40 W (6 ohms at 1 kHz, THD 10 %)
Surround mode	Front: 40 W + 40 W Center*: 40 W Rear*: 40 W + 40 W (6 ohms at 1 kHz, THD 10 %) Subwoofer*: 80 W (3 ohms at 100 Hz, THD 10 %)

S800 MODEL

Stereo mode	50 W + 50 W (6 ohms at 1 kHz, THD 10 %)
Surround mode	Front: 50 W + 50 W Center*: 50 W Rear*: 50 W + 50 W (6 ohms at 1 kHz, THD 10 %) Subwoofer*: 100 W (3 ohms at 100 Hz, THD 10 %)

* *Depending on the sound field settings and the source, there may be no sound output.*

Inputs (Analog)	VIDEO 1, 2: Sensitivity: 150 mV Impedance: 50 kilohms
Inputs (Digital)	VIDEO 2 (optical): Sensitivity: –
Outputs (Analog)	VIDEO 1 (AUDIO OUT): Voltage: 2 V Impedance: 1 kilohms PHONES: Accepts low- and high-impedance headphones
Outputs (Digital)	DIGITAL OUT (CD) Sensitivity: –

SACD/DVD system

Laser	Semiconductor laser
Signal format system	NTSC or NTSC/PAL
Frequency response (at 2 CH STEREO mode)	DVD (PCM): 2 Hz to 22 kHz (±1.0 dB) CD: 2 Hz to 20 kHz (±1.0 dB)
Signal-to-noise ratio	More than 80 dB (VIDEO 1 (AUDIO) connectors only)
Harmonic distortion	Less than 0.03 %

FM tuner section

System	PLL quartz-locked digital synthesizer system
Tuning range:	US, Canadian models: 87.5 – 108.0 MHz (100 kHz step) Other 87.5 – 108.0 MHz (50 kHz step)
Antenna	FM wire antenna
Antenna terminals	75 ohms, unbalanced
Intermediate frequency	10.7 MHz

AM tuner section

System	Tuner section: PLL quartz-locked digital synthesizer system
Tuning range US, Canadian models:	530 – 1,710 kHz (with the interval set at 10 kHz) 531 – 1,710 kHz (with the interval set at 9 kHz)
AEP, UK, Saudi Arabia models:	531 – 1,602 kHz (with the interval set at 9 kHz)
Other models:	531 – 1,602 kHz (with the interval set at 9 kHz) 530 – 1,710 kHz (with the interval set at 10 kHz)
Antenna	Loop antenna

Video section

Inputs	Video: 1 Vp-p 75 ohms
Outputs	Video: 1 Vp-p 75 ohms S-video: Y: 1 Vp-p 75 ohms C: 0.286 Vp-p 75 ohms

General

Power requirements	
US, Canadian models:	120 V AC, 60 Hz
AEP, UK models:	220 – 240 V AC, 50/60 Hz
Australian and E models:	220 – 240 V AC, 50/60 Hz
Mexican model:	120 V AC, 60 Hz
Other models:	110 – 240 V/220 – 240 V AC, 50/60 Hz
Power consumption	98 W (120 V AC) 98 W (230 V AC)
Dimensions (approx.)	355 × 70 × 378 mm (14 × 2 7/8 × 15 inches) (w/h/d) incl. projecting parts
Mass (approx.)	4.0 kg (9 lb 8 oz)
Operating temperature	5°C to 35°C (41°F to 95°F)
Operating humidity	5 % to 90 %
Supplied accessories	Check that you have the following items: • Speakers (5) • Subwoofer (1) • AM loop antenna (1) • FM wire antenna (1) • Speaker cords (5m × 4, 15m × 2) (16ft. × 4, 49ft. × 2) • Video cord (1) • Remote commander (remote) RM-SS800 (1) • R6 (size AA) batteries (2) • Foot pads (15) • Speakers-connection and Installation (card) (1) • Quick reference for Remote commander (card) (1)

Design and specifications are subject to change without notice.

COMPACT AV SYSTEM

9-873-291-09 **Sony Corporation**
2004H16-1 **Audio Group**
© 2004.08
Published by Sony Engineering Corporation

SONY®

Laser component in this product is capable of emitting radiation exceeding the limit for Class 1.

This appliance is classified as a CLASS 1 LASER product. The CLASS 1 LASER PRODUCT MARKING is located on the rear exterior.

This caution label is located inside the unit.

CAUTION
Use of controls or adjustments or performance of procedures other than those specified herein may result in hazardous radiation exposure.

Notes on chip component replacement

- Never reuse a disconnected chip component.
- Notice that the minus side of a tantalum capacitor may be damaged by heat.

Flexible Circuit Board Repairing

- Keep the temperature of soldering iron around 270˚C during repairing.
- Do not touch the soldering iron on the same conductor of the circuit board (within 3 times).
- Be careful not to apply force on the conductor when soldering or unsoldering.

SAFETY CHECK-OUT

After correcting the original service problem, perform the following safety checks before releasing the set to the customer:
Check the antenna terminals, metal trim, “metallized” knobs, screws, and all other exposed metal parts for AC leakage. Check leakage as described below.

LEAKAGE

The AC leakage from any exposed metal part to earth Ground and from all exposed metal parts to any exposed metal part having a return to chassis, must not exceed 0.5 mA (500 microampers). Leakage current can be measured by any one of three methods.

1. A commercial leakage tester, such as the Simpson 229 or RCA WT-540A. Follow the manufacturers’ instructions to use these instruments.
2. A battery-operated AC milliammeter. The Data Precision 245 digital multimeter is suitable for this job.
3. Measuring the voltage drop across a resistor by means of a VOM or battery-operated AC voltmeter. The “limit” indication is 0.75 V, so analog meters must have an accurate low-voltage scale. The Simpson 250 and Sanwa SH-63Trd are examples of a passive VOM that is suitable. Nearly all battery operated digital multimeters that have a 2V AC range are suitable. (See Fig. A)

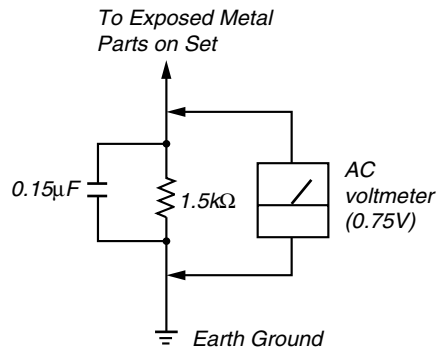

Fig. A. Using an AC voltmeter to check AC leakage.

NOTE OF REPLACING THE DVD BOARD

When replacing the DVD board, since the adjustment value is not set up correctly, “Drive Auto Adjustment” can’t be performed.
In this case, initialize Memory in the following procedures.

Procedure:

1. Starting test mode. (See page 12)
2. Press the [2] key of the remote commander, and set the “DRIVE MANUAL OPERATION”. (See page 18)
3. Press the [6] key of the remote commander, and set the “6. Memory Check”. (See page 20)
4. Press the [CLEAR] key of the remote commander, and initialize Memory.

SAFETY-RELATED COMPONENT WARNING!!

COMPONENTS IDENTIFIED BY MARK ⚠ OR DOTTED LINE WITH MARK ⚠ ON THE SCHEMATIC DIAGRAMS AND IN THE PARTS LIST ARE CRITICAL TO SAFE OPERATION. REPLACE THESE COMPONENTS WITH SONY PARTS WHOSE PART NUMBERS APPEAR AS SHOWN IN THIS MANUAL OR IN SUPPLEMENTS PUBLISHED BY SONY.

ATTENTION AU COMPOSANT AYANT RAPPORT À LA SÉCURITÉ!

LES COMPOSANTS IDENTIFÉS PAR UNE MARQUE ⚠ SUR LES DIAGRAMMES SCHÉMATIQUES ET LA LISTE DES PIÈCES SONT CRITIQUES POUR LA SÉCURITÉ DE FONCTIONNEMENT. NE REMPLACER CES COMPOSANTS QUE PAR DES PIÈSES SONY DONT LES NUMÉROS SONT DONNÉS DANS CE MANUEL OU DANS LES SUPPÉMENTS PUBLIÉS PAR SONY.

TABLE OF CONTENTS

1. SERVICING NOTE 5

2. GENERAL 6

3. DISASSEMBLY 8

4. TEST MODE 12

5. ELECTRICAL ADJUSTMENT 22

6. DIAGRAMS 25
- 6-1. Block Diagrams 26
  - – RF/Servo, Video Section – 26
  - – CPU Section – 27
  - – Power Section – 28
- 6-2. Printed Wiring Board – RF Section – 29
- 6-3. Schematic Diagram – RF Section – 30
- 6-4. Printed Wiring Board – DVD Section (1/2) – 31
- 6-5. Printed Wiring Board – DVD Section (2/2) – 32
- 6-6. Schematic Diagram – DVD (1/8) Section – 33
- 6-7. Schematic Diagram – DVD (2/8) Section – 34
- 6-8. Schematic Diagram – DVD (3/8) Section – 35
- 6-9. Schematic Diagram – DVD (4/8) Section – 36
- 6-10. Schematic Diagram – DVD (5/8) Section – 37
- 6-11. Schematic Diagram – DVD (6/8) Section – 38
- 6-12. Schematic Diagram – DVD (7/8) Section – 39
- 6-13. Schematic Diagram – DVD (8/8) Section – 40
- 6-14. Printed Wiring Board – AMP Section (1/2) – 41
- 6-15. Printed Wiring Board – AMP Section (2/2) – 42
- 6-16. Schematic Diagram – AMP Section (1/2) – 43
- 6-17. Schematic Diagram – AMP Section (2/2) – 44
- 6-18. Printed Wiring Board – I/O Section – 45
- 6-19. Schematic Diagram – I/O Section (1/2) – 46
- 6-20. Schematic Diagram – I/O Section (2/2) – 47
- 6-21. Printed Wiring Board – Panel Section – 48
- 6-22. Schematic Diagram – Panel Section – 49
- 6-23. Printed Wiring Board – Front Section – 50
- 6-24. Schematic Diagram – Front Section – 51
- 6-25. Printed Wiring Board – Power Section – 52
- 6-26. Printed Wiring Board – Power Section – 53
- 6-27. Schematic Diagram – Power Section – 54
- 6-28. Schematic Diagram – Loading Section – 55
- 6-29. Printed Wiring Board – Loading Section – 55
- 6-30. IC Block Diagrams 56
- 6-31. IC Pin Function Description 60

7. EXPLODED VIEWS
- 7-1. Main Section 70
- 7-2. Front Panel Section 71
- 7-3. Chassis Section 72
- 7-4. Mechanism Deck Section (CDM55D-DVBU8) 74

8. ELECTRICAL PARTS LIST 75

MODEL IDENTIFICATION

— BACK PANEL —

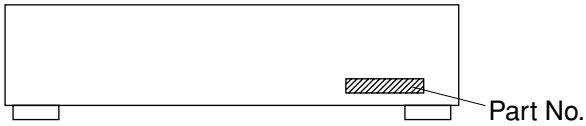

Model	PARTS No.	
	DAV-S500	DAV-S800
US, Canadian models	4-234-914-0☐	----------
AEP, UK models	4-236-491-2☐	4-234-914-1☐
Mexican model	4-234-914-2☐	4-236-126-6☐
E32 model	4-234-914-3☐	----------
Australian model	4-234-914-4☐	4-237-482-5☐
Malaysia, Singapore models	4-234-914-5☐	----------
E12 model	4-234-914-6☐	----------
Taiwan model	4-234-914-7☐	4-237-482-6☐
Argentine model	4-234-914-8☐	----------
Saudi Arabia model	4-234-914-9☐	4-237-482-3☐
Hong Kong model	4-237-482-0☐	4-237-482-4☐
CIS model	4-237-482-7☐	4-237-482-2☐

- Abbreviation
  E12 : 220-240V AC area in E model
  E32 : 110-240V AC area in E model

Self-diagnosis Function

(When letters/numbers appear in the display)

When the self-diagnosis function is activated to prevent the system from malfunctioning. In this case a five-character service number (e.g., C 13 00) with a combination of a letter and digits appears on the screen and the front panel display. Refer to the following table.

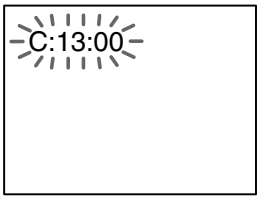

First three characters of the service number	Cause and/or Corrective Action
C 13	The disc is dirty. ➡ Clean the disc with a soft cloth (page 9).
C 31	The disc is not inserted correctly. ➡ Re-insert the disc correctly.
E XX (xx is a number)	To prevent a malfunction, the system has performed the self-diagnosis function. ➡ Contact your nearest Sony dealer or local authorized Sony service facility and give the 5-character service number. Example: E 61 10

NOTES ON HANDLING THE OPTICAL PICK-UP BLOCK OR BASE UNIT

The laser diode in the optical pick-up block may suffer electrostatic break-down because of the potential difference generated by the charged electrostatic load, etc. on clothing and the human body.
During repair, pay attention to electrostatic break-down and also use the procedure in the printed matter which is included in the repair parts.
The flexible board is easily damaged and should be handled with care.

NOTES ON LASER DIODE EMISSION CHECK

The laser beam on this model is concentrated so as to be focused on the disc reflective surface by the objective lens in the optical pick-up block. Therefore, when checking the laser diode emission, observe from more than 30 cm away from the objective lens.

LASER DIODE AND FOCUS SEARCH OPERATION CHECK

Carry out the “S curve check” in “CD section adjustment” and check that the S curve waveform is output several times.

SECTION 1
SERVICING NOTE

HOW TO OPEN THE DISC TRAY WHEN POWER SWITCH TURNS OFF

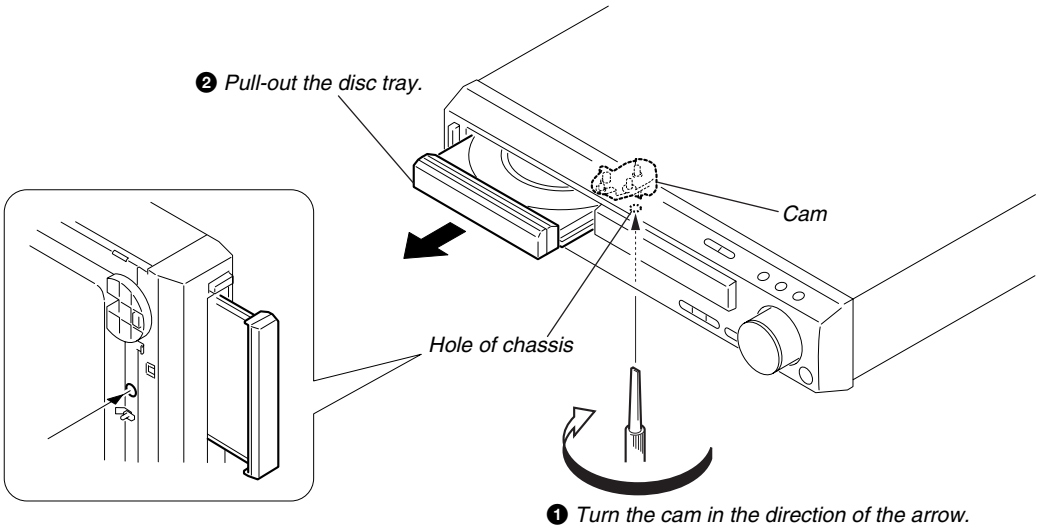

When removing the disc tray, high torque is necessary to turn the ejection cam on the bottom surface. Therefore, the screw thread is easily damaged. To prevent this damage, turn it carefully.

CHECKING OF OPERATIONS WITH REMOTE COMMANDERS OF DIFFERENT MODELS

Some of the signal of remote commander vary between generation of player.
Between DAV-S400/S500/S800/C450/C700/C900 and DAV-S550/S880/C770/C900, remote commander signal codes of “FUNCTION”, “BAND”, “ST/MONO” and “MEMORY” are different.
Take notice of the above when you check the operation with remote commanders of different models.

This section is extracted from instruction manual.

Index to Parts and Controls

For more information, refer to the pages indicated in parentheses.

Front Panel

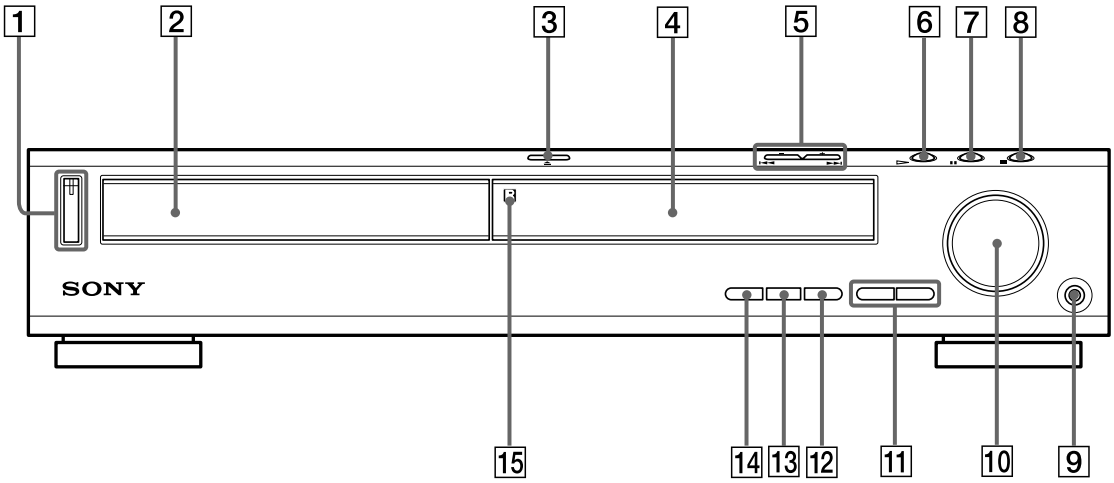

1 POWER switch/indicator (31)
2 Disc tray (31)
3 ≜ OPEN/CLOSE (31)
4 Front panel display (11)
5 ⏮ / ⏭ PREV/NEXT, PRESET +/– (29, 32)
6 ▷ (play) (31)
7 ❚❚ (pause) (32)
8 ■ (stop) (31)
9 PHONES jack (31)
10 VOLUME control (31)
11 SOUND FIELD +/– (47)
12 DISPLAY (47, 60)
13 BAND (29)
14 FUNCTION (59)
15 (remote sensor) (17)

Rear Panel

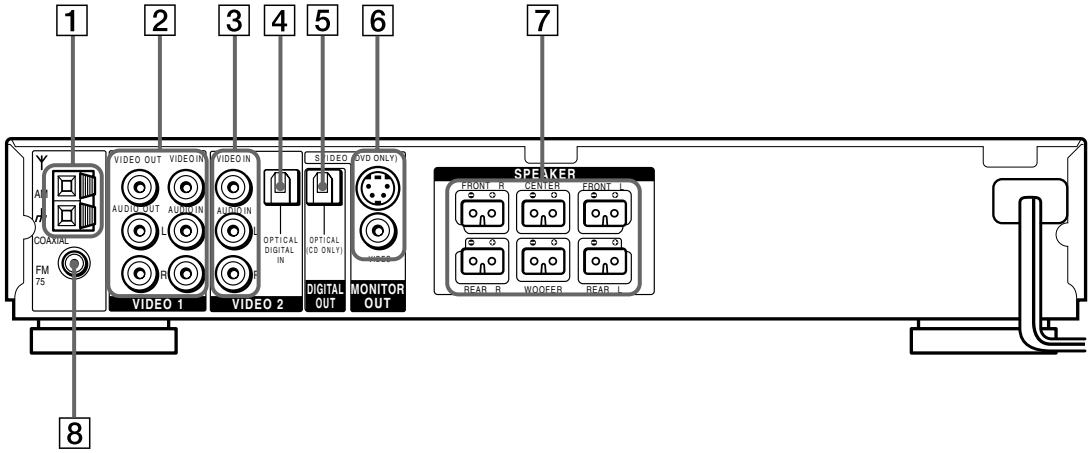

1 AM antenna (20)
2 VIDEO 1 jacks (22)
3 VIDEO 2 jacks (22)
4 DIGITAL IN (OPTICAL) jack (23)
5 DIGITAL OUT (OPTICAL) jack
6 MONITOR OUT (VIDEO/S VIDEO) jacks (22)
7 SPEAKER jacks (18)
8 FM 75 COAXIAL antenna jack (21)

Remote

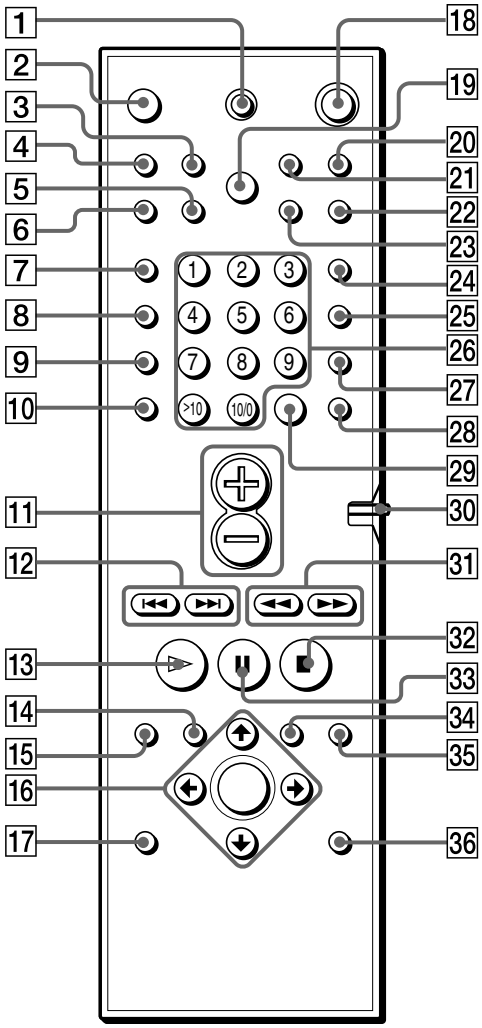

Note

This remote control glows in the dark. However, before glowing, the remote must be exposed to light for awhile.

1 TV I/⏻ (on/standby) (58)
2 OPEN/CLOSE (31)
3 NAME (61)
4 STEREO/MONO (60)
5 MEMORY (29)
6 CLEAR (35)

7 PLAY MODE (35)
8 AUDIO (45)
9 ANGLE (50)
10 SUBTITLE (51)
11 VOL +/– (60)
12 ⏮/⏭ PREV/NEXT, TV/PRESET +/– (29, 32)

13 ▷ PLAY/SELECT (31)
14 TITLE (33)
15 DVD DISPLAY (38)
16 ←/↑/↓/→/ENTER (25)
17 DVD SETUP (54)
18 I/⏻ (on/standby) (31)

19 DIMMER (28)
20 TV/VIDEO (58)
21 REPEAT (38)
22 MUTING (32)
23 TIME (42)
24 FUNCTION (59)

25 BAND (29)
26 Number buttons (33)
27 SOUND FIELD (47)
28 DISPLAY (47, 60)
29 ENTER
30 CONTROL DVD/TV switch (58)

31 ◀◀/▶▶/◀I/I▶ SLOW, TUNING +/– (29, 39)
32 ■ STOP (31)
33 II PAUSE (32)
34 DVD MENU (34)
35 ↶ RETURN (34)
36 AMP MENU (25)

SECTION 3
DISASSEMBLY

• The equipment can be removed using the following procedure.

Set ➡ *Case (Top)* ➡ *Front panel section*

↓

DVD mechanism deck (CDM550-DVBU8) ➡ *Loading board, Loading motor assembly (M901)*
➡ *RF-240 board*
➡ *Tray* ➡ *Optical pick-up (KHM-240AAA)*

Note: Follow the disassembly procedure in the numerical order given.

1. CASE (TOP), DVD LID, LID WINDOW SUB ASSEMBLY

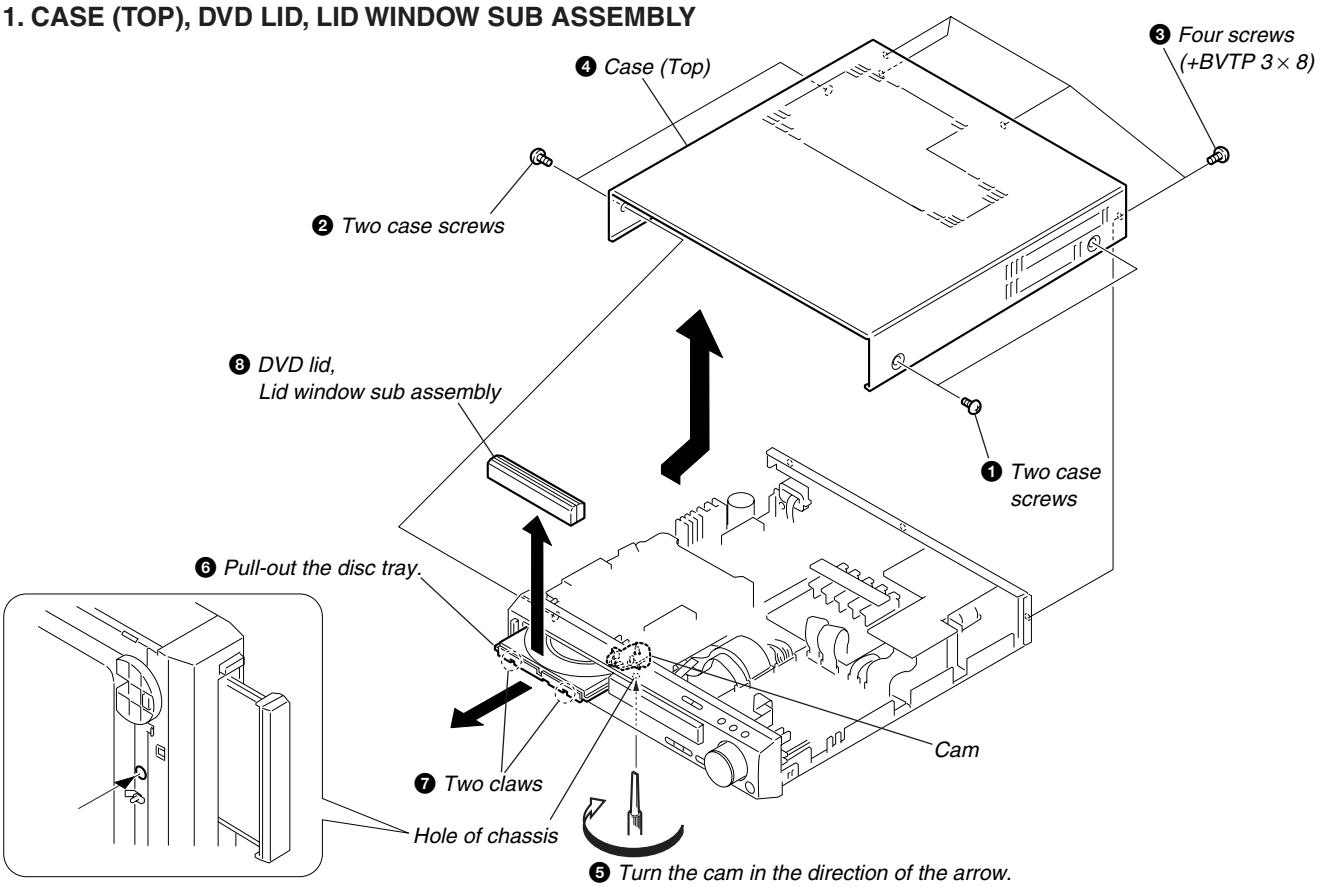

2. FRONT PANEL SECTION

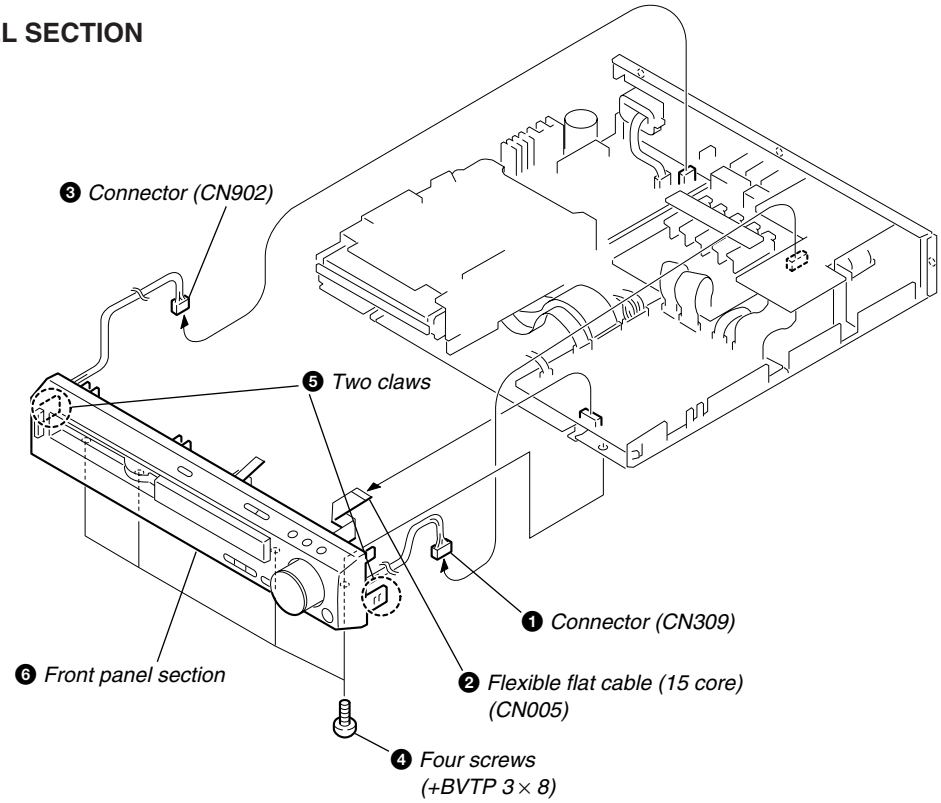

3. DVD MECHANISM DECK (CDM55D-DVBU8)

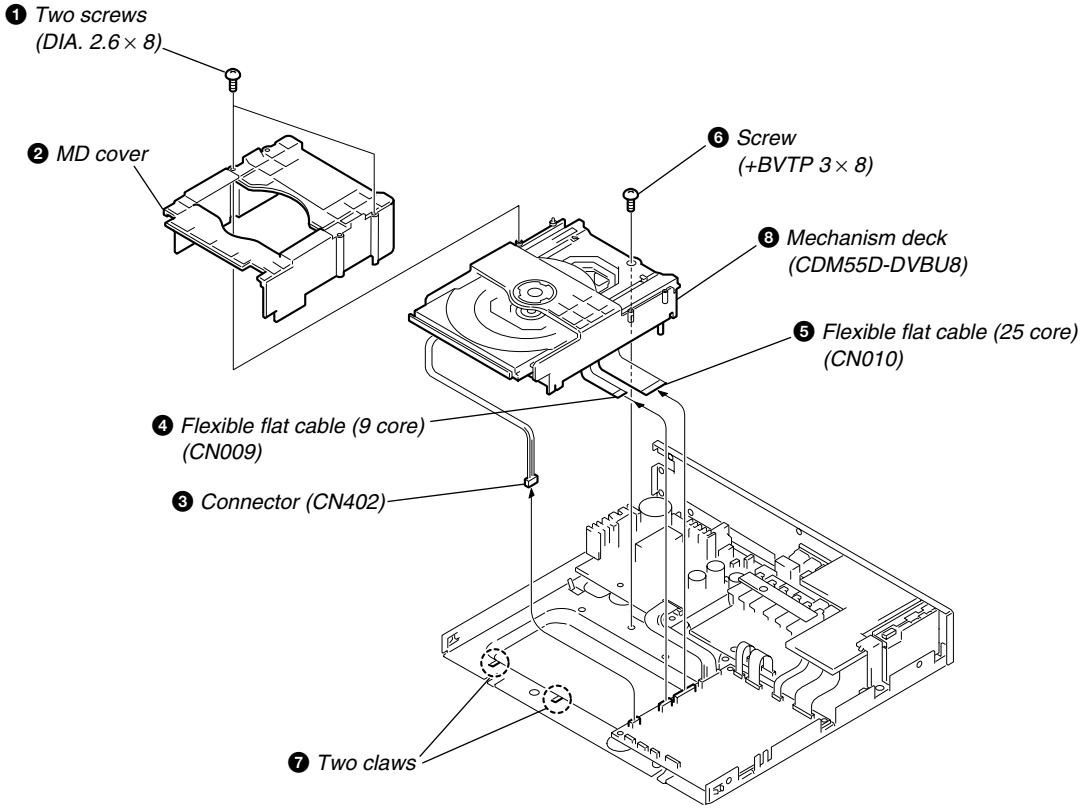

4. LOADING BOARD, LOADING MOTOR ASSEMBLY (M901)

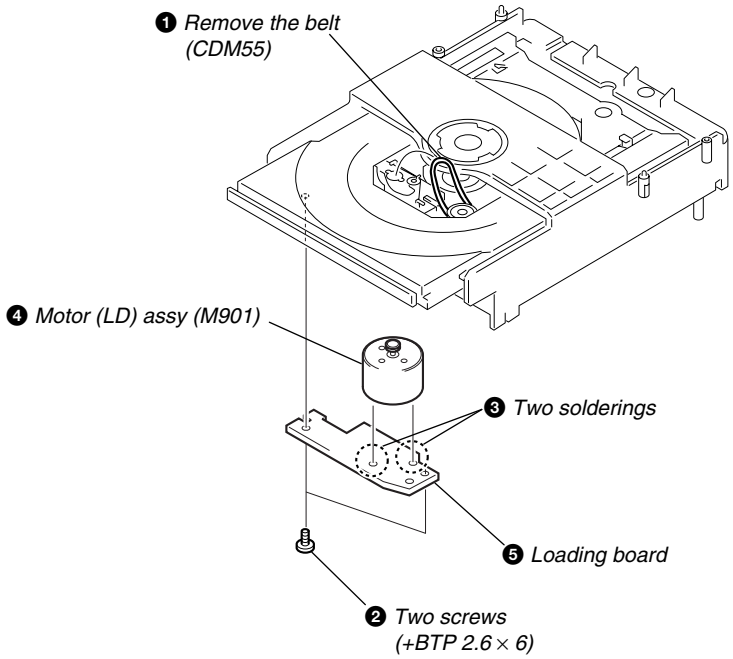

5. RF-240 BOARD

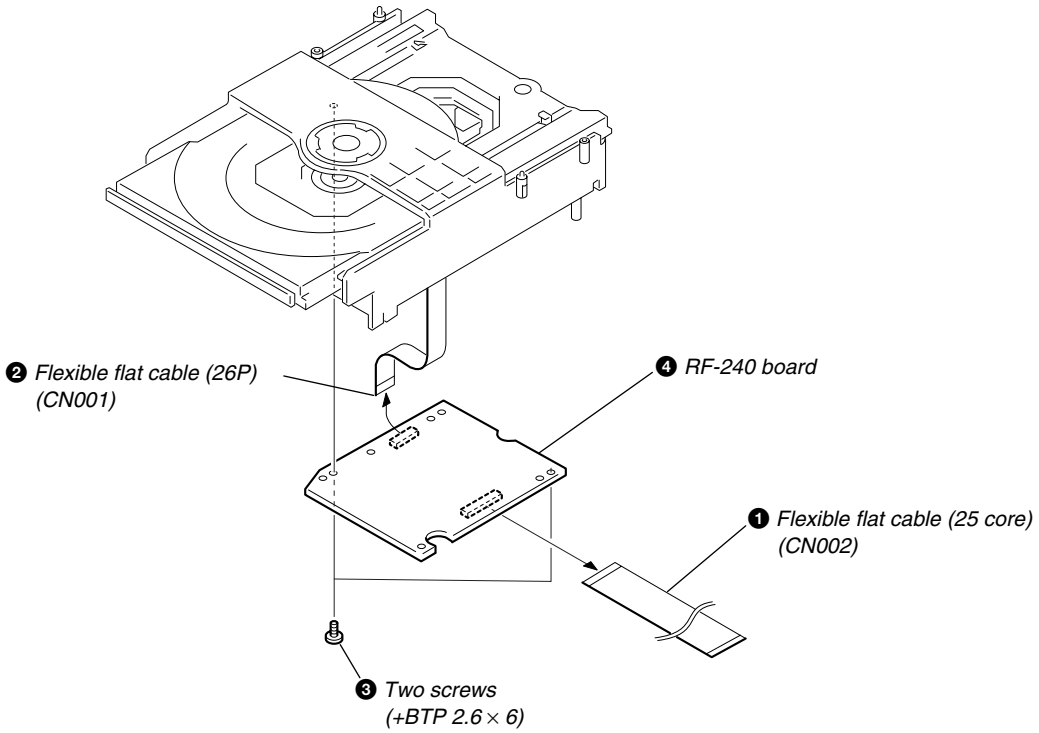

6. TRAY

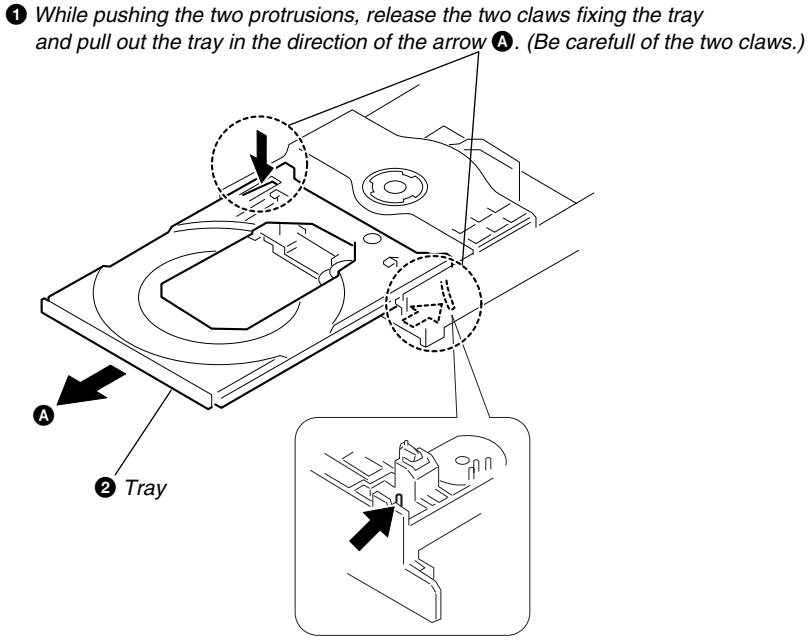

7. OPTICAL PICK-UP (KHM-240AAA)

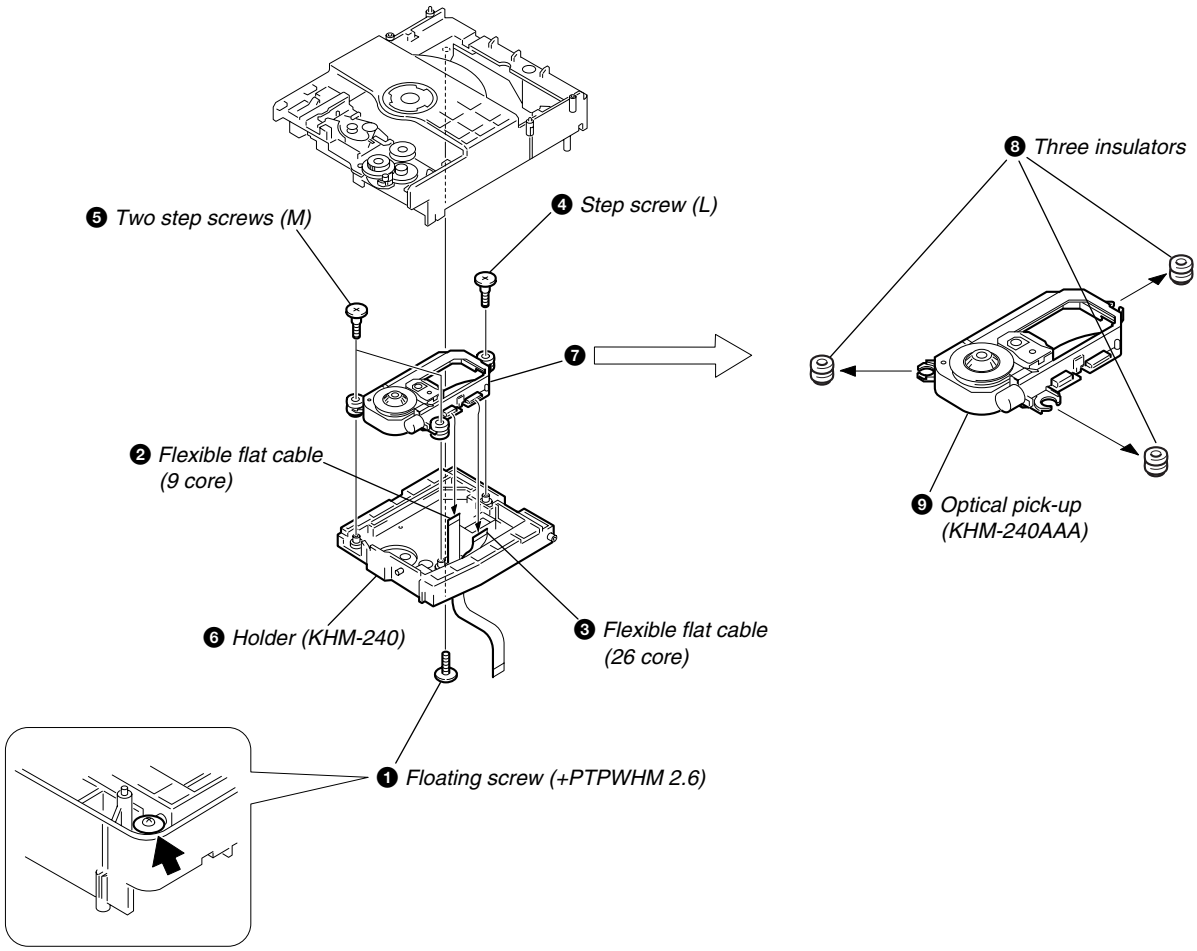

SECTION 4
TEST MODE

4-1. VERSION DISPLAY MODE

Procedure:

1. Press the ⏏ button on the main unit or ⏻ button on the remote commander to turn the set on.
2. Press three buttons of FUNCTION , ⏮ PREV and ⏏ simultaneously for two seconds.
3. The message "VER. 1. ** " is displayed for a moment.

4-2. JOG TEST MODE

Procedure:

1. Press the ⏏ button on the main unit or ⏻ button on the remote commander to turn the set on.
2. Press three buttons of BAND , ■ and ⏏ simultaneously.
3. The fluorescent indicator displays "JOG 0". The value "JOG 0" increases like +1, +2, +3... if rotating the VOLUME knob clockwisw,or it decreases like –1, –2, –3,.... if rotating counter-clockwise.
4. To exit from this mode, press the POWER button to turn the set off.

4-3. KEY TEST MODE

Procedure:

1. Press the ⏏ button on the main unit or ⏻ button on the remote commander to turn the set on.
2. Press three buttons of DISPLAY, ■ and ⏏ simultaneously.
3. The message "KEY NUM 0" is displayed and "0" blinks.
4. Each time a button is pressed, "KEY NUM 0" value increases. However, once a button is pressed, it is no longer taken into account.
5. When all buttons are pressed, "KEY NUM 11" appears and the number blinking is stopped.
6. To exit from this mode, press the POWER button to turn the set off.

4-4. DISPLAY TEST MODE

Procedure:

1. Press the ⏏ button on the main unit or ⏻ button on the remote commander to turn the set on.
2. Press three buttons of BAND , ❚❚ and ⏏ simultaneously.
3. All segments are turned on.

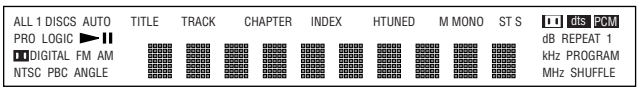

4. When the NEXT ▶▶I button is pressed, the display will light up as follows.

5. Press the NEXT ▶▶I button, confirm the display.

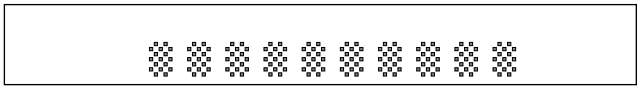

6. Press the NEXT ▶▶I button, all segments are turned off.
7. Every pressing of the NEXT ▶▶I button turns on each segments in the same order.
8. To exit from this mode, press the POWER button to turn the set off.

4-5. OSD TEST MODE

Procedure:

1. Press the ⏏ button on the main unit or ⏻ button on the remote commander to turn the set on.
2. Set the FUNCTION to DVD.
3. While pressing two buttons of DISPLAY and ■ simultaneously, turn the VOLUME knob clockwise.
4. The Test Mode Menu is displayed on the TV screen.
5. To execute each function, select the number on the remote commander.
6. See the following section for explanation in detail.
7. To exit from this mode, press the POWER button to turn the set off.

4-6. DISC TRAY LOCK

Procedure:

1. Press the ⏏ button on the main unit or ⏻ button on the remote commander to turn the set on.
2. Press two buttons of DISPLAY and ⏮ PREV simultaneously for two seconds.
3. The message "LOCKED" is displayed and the tray is locked. (Even if exiting from this mode, the tray is still locked.)
4. Press two buttons of DISPLAY and ⏮ PREV simultaneously for two seconds again.
5. The message "UNLOCKED" is displayed and the tray is unlocked.
6. To exit from this mode, press the POWER button to turn the set off.

4-7. GENERAL DESCRIPTION

The Test Mode allows you to make diagnosis and adjustment easily using the remote commander and monitor TV. The instructions, diagnostic results, etc. are given on the on-screen display (OSD).

[TEST DISC LIST]

Use the following test disc on test mode.

1) DVD reference disc
   HLX-501 (J-6090-071-A) (dual layer)
   HLX-503 (J-6090-069-A) (single layer)
   HLX-504 (J-6090-088-A) (single layer)
   HLX-505 (J-6090-089-A) (dual layer)
2) SACD reference disc
   HLXA-509 (J-6090-090-A)
   Note: Do not use exiting test disc for DVD.

4-8. STARTING TEST MODE

Set the FUNCTION to DVD with the main unit power on. Next, while pushing the ■ button and the DISPLAY button on the main unit at the same time, turn the VOLUME knob to the right to start Test Mode and display the menu shown below on the TV screen. At the bottom of the menu screen, the model name and revision number are displayed.

To execute each function, select the desired menu and press its number on the remote commander. To exit from Test Mode, press the POWER button.

```
Test Mode Menu

0. Syscon Diagnosis
1. Drive Auto Adjustment
2. Drive Manual Operation
3. Mecha Aging
4. Emergency History
5. Version Information
6. Video Level Adjustment
                 Exit: POWER Key
_
Model    : HCX-1030_xx
Revision: 1.xxx
```

4-9. SYSCON DIAGNOSIS

The same contents as board detail check by serial interface can be checked from the remote commander.
On the Test Mode Menu screen, press [0] key on the remote commander, and the following check menu will be displayed.

```
    ### Syscon Diagnosis ###
           Check Menu
0. Quit
1. All
2. Version
3. Peripheral
4. Servo
5. Supply
6. AV Decoder
7. Video
8. Audio
9. DSD Decoder
_
```

0. Quit

Quit the Syscon Diagnosis and return to the Test Mode Menu.

1. All

All items continuous check
This menu checks all diagnostic items continuously. Normally, all items are checked successively one after another automatically unless an error is found, but at a certain item that requires judgment through a visual check to the result, the following screen is displayed for the key entry.

```
    ### Syscon Diagnosis ###

Diag All Check
No. 2 Version

 2-3. ROM Check Sum
Check Sum = 2005



Press NEXT Key to Continue
Press PREV Key to Repeat
_
```

For the ROM Check, the check sum calculated by the Syscon is output, and therefore you must compare it with the specified value for confirmation.
Following the message, press [NEXT] key to go to the next item, or [PREV] key to repeat the same check again. To quit the diagnosis and return to the Check Menu screen, press [■] or [ENTER] key. If an error occurred, the diagnosis is suspended and the error code is displayed as shown below.

```
    ### Syscon Diagnosis ###




 3-3. EEPROM Check
Error 03: EEPROM Write/Reed N
Address    : 00000001
Write Data : 2492
Read Data  : 2490
Press NEXT Key to Continue
Press PREV Key to Repeat
_
```

Press [■] key to quit the diagnosis, or [PREV] key to repeat the same item where an error occurred, or [NEXT] key to continue the check from the item next to faulty item.

Selecting 2 and subsequent items calls the submenu screen of each item.
For example, if “5. Supply” is selected, the following submenu will be displayed.

```
    ### Syscon Diagnosis ###
           Check Menu
          No. 5 Supply
0. Quit
1. All
2. ARP Register Check
3. ARP to RAM Data Bus
4. ARP to RAM Address Bus
5. ARP RAM Check
_
```

0. Quit

Quit the submenu and return to the main menu.

1. All

All submenu items continuous check
This menu checks 2 and subsequent items successively. At the item where visual check is required for judgment or an error occurred, the checking is suspended and the message is output for key entry. Normally, all items are checked successively one after another automatically unless an error is found.

Selecting 2 and subsequent items executes respective menus and outputs the results.
For the contents of each submenu, see “Check Items List”.

General Description of Checking Method

2. Version

(2-2) Revision
ROM revision number is displayed.-
Error: Not detected.
The revision number defined in the source file of ROM (At the beginning of mass production, the Flash ROM of IC107 is used, but midway it is replaced by the IC108 OTP ROM. IC107 or IC108) is displayed with four digits.
Below IC107 are all IC107 or IC108.

(2-3) ROM Check Sum
Check sum is calculated.
Error: Not detected.
The 8-bit data are added at addresses 0x000F0000 ~ 0x002EFFFF of ROM (IC107) and the result is displayed with 4-digit hexadecimal number. Error is not detected. Compare the result with the specified value.

(2-4) Model Type
Model code is displayed.
Error: Not detected.
The model code read from EEPROM (IC101) is displayed with 2-digit hexadecimal number.

(2-5) Region
Region code is displayed.
Error: Not detected.
The region code determined from the model code is displayed.

3. Peripheral

(3-2) EEPROM Check
Data write → read, and accord check
Error 03: EEPROM write/read discord
Data 0x9249, 0x2942, 0x4294 are written to addresses 0x00~0xFF of EEPROM (IC101), then read and checked. Before writing, the data are saved, then after checking, they are written to restore the contents of EEPROM.

4. Servo

(4-2) Servo DSP Check
Data write → read, and accord check
Error 12: Read data discord
Data 0x9249, 0x2942, 0x4294 are written to the address 0x602 of RAM in the Servo DSP (IC302), then read and checked.

(4-3) DSP Driver Test
Test signal data → DSP Driver
Error: Not detected.
Caution: Do not conduct this test with a mechanical deck connected.
The maximum voltage is applied to the Servo Driver IC (IC401, IC802). If mechanical deck is connected, the motor and optics could be damaged. Disconnect mechanical deck following the output message, then enter specified 4- or 5-digit number from the remote commander, and press the [ENTER]. The test is conducted only when the input data accord. Check the output level, then press the [NEXT] to finish the test.
This test is skipped if "All" is selected.

Supplement: How to disconnect mechanical deck
Disconnect flat cables connected to the CN009 and CN010 of MB-82/85 board. Also, disconnect harness from the CN402.

5. Supply

Caution: Do not conduct this check with a mechanical deck connected.
An access is made to the stream supply and servo control IC (IC302) and external RAM (IC303) using check data. If mechanical deck is connected, the motor and optics could be damaged. This check is also executed by the "All" menu item.

Supplement: How to disconnect mechanical deck
Disconnect flat cables connected to the CN009 and CN010 of DVD board. Also, disconnect harness from the CN402.

(5-2) ARP Register Check
Data write → read, and accord check
Error 08: ARP register write, and read data discord
Data 0x00 to 0xFF are written to the TMAX register (address 0xC6) in ARP (IC302), then they are read and checked.

(5-3) ARP to RAM Data Bus
Data write → read, and accord check
Error 09: ARP ←→ RAM data bus error
Data 0x0001 to 0x8000 where one bit each is set to 1 are written to the address 0 of RAM (IC303) connected to the ARP (IC302) through the bus, then they are read and checked. In case of discord, written bit pattern and read data are displayed. If data where multiple bits are 1 are read, the bits concerned may touch each other. Further, if data where certain bit is always 1 or 0 regardless of written data, the line could be disconnected or shorted.

(5-4) ARP to RAM Address Bus
Data write → other address read discord check
Error 10: ARP → RAM address bus error
Caution: Address and data display in case of an error is different from the display of other diagnosis (described later).
Before starting the test, all addresses of RAM (IC303) are cleared to 0x0000.
First, 0xA55A is written to the address 0x00000, and the address data are read and checked from addresses 0x00001 to 0x80000 while shifting 1 bit each. Next, the data at that address is cleared, and it is written to the address 0x00001, and read and checked in the same manner. This check is repeated up to the address 0x80000 while shifting the address data by 1 bit each.
If data other than 0 is read at the addresses except written address, an error is given because all addresses were already cleared to 0. In this check, the error display pattern is different from that of other diagnosis; read data, written address, and read address are displayed in this order. However, the message uses same template, and accordingly exchange Address and Data when reading. The following display, for example,

```
    ### Syscon Diagnosis ###



 5-4. ARP to RAM Address Bus
Error 10: ARP - RAM Address B
Address    : 0000A55A
Write Data : 00000000
Read Data  : 00080000
Press NEXT Key to Continue
Press PREV Key to Repeat
_
```

shows the data 0xA55A was read from address 0x00080000 though it was written to the address 0x00000000. This implies that these addresses are in the form of shadow. Also, if the read data is not 0xA55A, another error will be present.

(5-5) ARP RAM Check
Data write → read, and accord check
Error 11: ARP RAM read data discord
The program code data stored in ROM are copied to all areas of RAM (IC303) connected to the ARP (IC302) through the bus, then they are read and checked if they accord. If the detail check was selected initially, the data are written to all areas and read, then the same test is conducted once again with the data where all bits are inverted between 1 and 0. If discord is detected, faulty address, written data, and read data are displayed following the error code 11, and the test is suspended.

6. AV Decoder

(6-2) 1930 RAM
Data write → read, and accord check
Error 13: AVD RAM read data discord
The program code data stored in ROM (IC107 or IC108) are copied to all areas oo»RAM (IC504, IC505) connected to the AVD (IC503) through the bus, then they are read and checked if they accord. Further, the same test is conducted once again with the data where all bits are inverted between 1 and 0. If discord is detected, faulty address, written data, and read data are displayed following the error code 13, and the test is suspended.

(6-3) 1930 SP
ROM → AVD RAM → Video OUT
Error: Not detected.
The data including sub picture streams in ROM (IC107 or IC108) are transferred to the RAM (IC504, IC505) in AVD (IC503), and output as video signals from the AVD (IC503). They are output from all video terminals (Composite, Y/C).

7. Video

(7-2) Color Bar
AVD color bar command write → Video OUT
Error: Not detected.
The command is transferred to the AVD, and the color bar signals are output from video terminals.
They are output from all video terminals (Composite, Y/C).

(7-3) Composit Out

(7-4) Y/C Out

(7-6) Component Out

8. Audio

(8-2) ARP → 1930
Error 14 : ARP → 1930 video NG
15 : ARP → 1930 audio NG

(8-3) Test Tone
All channels
2ch Left
2ch Right
Front Left
Front Right
Rear Left
Rear Right
Center
Sub Woofer

9. DSD Decoder

(9-2) 2752 ID Chack

(9-3) 2752 RAM Check

Check Items List

2) Version
(2-2) Revision
(2-3) ROM Check Sum
(2-4) Model Type
(2-5) Region

3) Peripheral
(3-2) EEPROM Check

4) Servo
(4-2) Servo DSP Check
(4-3) DSP Driver Test

5) Supply
(5-2) ARP Register Check
(5-3) ARP to RAM Data Bus
(5-4) ARP to RAM Address Bus
(5-5) ARP RAM Check

6) AV Decoder
(6-2) 1930 RAM
(6-3) 1930 SP

7) Video
(7-2) Color Bar
(7-3) Composit Out
(7-4) Y/C Out
(7-6) Component Out

8) Audio
(8-2) ARP → 1930
(8-3) Test Tone

9) DSD Decoder
(9-2) 2752 ID Check
(9-3) 2752 RAM Check

Error Codes List

00: Error not detected
01: RAM write/read data discord
02: Gate array NG
03: EEPROM NG
08: ARP register read data discord
09: ARP ←→ RAM data bus error
10: ARP ←→ RAM address bus error
11: ARP RAM read data discord
12: Servo DSP NG
13: 1930 SDRAM NG
14: ARP → 1930 video NG
15: ARP → 1930 audio NG
16: 1910 UCODE download NG
17: System call error (function not supported)
18: System call error (parameter error)
19: System call error (illegal ID number)
20: System call error (time out)
90: Error occurred
91: User verification NG
92: Diagnosis cancelled

4-10. DRIVE AUTO ADJUSTMENT

On the Test Mode Menu screen, press [1] key on the remote commander, and the drive auto adjustment menu will be displayed.

```
## Drive Auto Adjustment ##

      Adjustment Menu

0. ALL
1. DVD-SL
2. CD
3. DVD-DL
4. LCD



                Exit: RETURN
```

Normally, [0] is selected to adjust DVD (single layer), CD, DVD (dual layer), and SACD in this order. But, individual items can be adjusted for the case where adjustment is suspended due to an error. In this mode, the adjustment can be made easily through the operation following the message displayed on the screen.
The disc used for adjustment must be the one specified for adjustment. However, for SACD disc, use the player with initial data if the disc is not available.

Note: After parts related to the servo circuit (RF amplifier, DSP, motor driver, EEPROM (IC101) so on) are replaced, re-adjusting the servo circuit is necessary. Select "ALL" at "DRIVE AUTO ADJUSTMENT " and adjust DVD-SL (single layer), CD and DVD-DL (dual layer).

0. ALL

Select [0] and press [ENTER] key, and the servo set data in EEPROM will be initialized. Then, 1. DVD-SL disc, 2. CD disc, 3. DVD-DL disc, and 4. SACD disc are adjusted in this order. Each time one disc was adjusted, it is ejected. Replace it with the specified disc following the message. Though the message to confirm whether discs other than SACD disc are adjusted is not displayed, you can finish the adjustment if pressing the [■] button. During adjustment of each disc, the measurement for disc type judgment is made. As automatic adjustment does not judge the disc type unlike conventional models, take care not to insert wrong type discs. Also, do not give a shock during adjustment.

1. DVD-SL (single layer)

Select [1], insert DVD single layer disc, and press [ENTER] key, and the adjustment will be made through the following steps, then adjusted values will be written to the EEPROM.

DVD Single Layer Disc Adjustment Steps
1. SLED TILT Reset
2. Disc Check Memory SL
3. Wait 300 msec
4. Set Disc Type SL
5. LD ON
6. Spdl Start
7. Wait 1 sec
8. Focus Servo ON 0
9. Auto Track Offset Adjust
10. CLVA ON
11. Wait 500 msec
12. Tracking ON
13. Wait 1 sec
14. Sled ON
15. Check CLV Lock
16. Auto LFO Adjust
17. Auto Focus Offset Adjust
18. Auto Tilt Position Adjust
19. Auto Focus Gain Adjust
20. Auto Focus Offset Adjust
21. EQ Boost Adjust
22. Auto LFO Adjust
23. Auto Track Gain Adjust, Search Check
24. 32Tj Fwd
25. 32Tj Rev
26. 500Tj Fwd
27. 500Tj Rev

28. All Servo Stop
29. Eep Copy Loop Filter Offset

2. CD

Select [2], insert CD disc, and press [ENTER] key, and the adjustment will be made through the following steps, then adjusted values will be written to the EEPROM.

CD Adjustment Steps
1. Sled Tilt Rest
2. Disc Check Memory CD
3. Wait 500 msec
4. Set Disc Type CD
5. LD ON
6. Spdl Start
7. Wait 500 msec
8. Focus Servo ON 0
9. Auto Track Offset Adjust

10. CLVA ON
11. Wait 500 msec
12. Tracking ON
13. (TC Display Start)
14. Wait 1 sec
15. Jitter Display Start
16. Sled ON
17. Check CLV ON
18. Auto LFO Adjust
19. Auto Focus Offset Adjust
20.
21. Auto Focus Gain Adjust
22. Auto Focus Offset Adjust
23. Eq Boost Adjust
24. Auto LFO Adjust
25. Auto Track Gain Adjust, Search Check
26. 32Tj Fwd
27. 32Tj Rev
28. 500Tj Fwd
29. 500Tj Rev

30. All Servo Stop

3. DVD-DL (dual layer)

Select [3], insert DVD dual layer disc, and press [ENTER] key, and the adjustment will be made through the following steps, then adjusted values will be written to the EEPROM.

DVD Dual Layer Disc Adjustment Steps
1. Sled Tilt Reset
2. Disc Check Memory DL
3. Wait 500 msec
4. Set Disc Type DL
5. LD ON
6. Spdl Start
7. Wait 1 sec, Layer 1 Adjust
8. Focus Servo ON 0
9. Auto Track Offset Adjust

10. Clva ON
11. Wait 500 msec
12. Tracking ON
13. Wait 500 msec
14. Sled ON
15. Check CLV Lock
16. Auto Loop Filter Offset Auto Focus Adjust
17.
18. Auto Focus Gain Adjust
19. Auto Focus Offset Adjust
20. Eq Boost Adjust
21. Auto Loop Filter Offset
22. Auto Track Gain Adjust, Search Check
23. 32Tj Fwd
24. 32Tj Rev
25. 500Tj Fwd
26. 500Tj Rev, Layer 0 Adjust
27. Fj (L1 -> L0)
28. Auto Track Offset Adjust L0

29. Clva ON
30. Wait 500 msec
31. Tracking ON
32. Wait 500 msec
33. Sled ON
34. Check CLV Lock
35. Auto Focus Filter Offset
36. Auto Focus Adjust
37.
38. Auto Focus Gain Adjust
39. Auto Focus Offset Adjust
40. Eq Boost Adjust
41. Auto Loop Filter Offset
42. Auto Track Gain Adjust, Search Check
43. 32Tj Fwd
44. 32Tj Rev
45. 500Tj fwd
46. 500Tj Rev, Layer Jump Check
47. Lj (L0 -> L1)
48. Lj (L1 -> L0)

49. All Servo Stop

4. LCD

Select [4], insert SACD disc, and press [ENTER] key, and the adjustment will be made through the following steps, then adjusted values will be written to the EEPROM. However, if SACD disc is not available, use the player with initial data, skipping the SACD adjustment. In this case, you can finish the adjustment if pressing the [■] button.

SACD Adjustment Steps
1. Sled Tilt Reset
2. Set Disc Type CD
3. LD ON
4. Spdl Start
5. Wait 500 msec
6. Focus Servo ON 0
7. Auto track Offset Adjust
8.
9. CLVA ON
10. Wait 500 msec
11. Tracking ON
12. Wait 1 sec
13. Sled ON
14. Check CLV ON
15. Auto Focus Offset Adjust
17.
18. Auto Focus Gain Adjust
19. Auto Focus Offset Adjust
20. Eq Boost Adjust
21. Auto LFO Adjust
22. Auto Track Gain Adjust

23. 32Tj Fwd
24. 32Tj Rev
25. 500Tj Fwd
26. 500Tj Rev

27. All Servo Stop */

4-11. DRIVE MANUAL OPERATION

On the Test Mode Menu screen, select [2], and the manual operation menu will be displayed. For the manual operation, each servo on/off control and adjustment can be executed manually.

```
  ## Drive Manual Operation ##

         Operation Menu
1. Disc type
2. Servo Control
3. Track/Layer Jump
4. Manual Adjustment
5. Auto Adjustment
6. Memory Check
7. Sacd Water Mark

0. Disc Check Memory
_
                Exit: Return
```

In using the manual operation menu, take care of the following points. These commands do not provide protection, thus requiring correct operation. The sector address or time code field is displayed when a disc is loaded.

1. Set correctly the disc type to be used on the Disc Type screen.
   The disc type must be set after a disc was loaded.
   The set disc type is cleared when the tray is opened.
2. After power ON, if the Drive Manual Operation was selected, first perform “Reset SLED TILT” by opening 1. Disc Type screen.
3. In case of an alarm, immediately press the [■] button to stop the servo operation, and turn the power OFF.

Basic operation (controllable from front panel or remote commander)

[POWER]	Power OFF
[■]	Servo stop
[OPEN/CLOSE]	Stop+Eject/Loading
[RETURN]	Return to Operation Menu or Test Mode Menu
[NEXT], [PREV]	Transition between sub modes of menu
[1] to [9], [0]	Selection of menu items
Cursor UP/DOWN	Increase/Decrease in manually adjusted value

0. Disc Check Memory

```
            Disc Check



1. SL Disc Check
2. CD Disc Check
3. DL Disc Check



0. Reset SLED TILT
_
```

On this screen, the mirror time is measured to judge the disc and it is written to the EEPROM. First load DVD SL disc and press [1], next load CD disc and press [2], and finally load DVD DL disc and press [3].
The adjustment must be executed more than once after default data were written. External vibration or shock to the player must not be given. Reference value for DVD is from 10 to 20, and for CD, from 28 to 4F.
Check that the value of CD is larger than that of DVD.
When those values are beyond a range perform this adjustment again.
From this screen, you can go to another mode by pressing [NEXT] or [PREV] key, but you cannot enter this mode from another mode.
You can enter this mode from the Operation Menu screen only.

1. Disc Type

```
            Disc Type
1. Disc Type Auto Check
2. DVD SL   12 cm
3. DVD DL   12 cm
4. CD       12cm
5. LCD      12 cm
6. DVD SL   8 cm
7. DVD DL   8 cm
8. CD       8 cm
9. LCD      8 cm
0. Reset SLED TILT
-- SA. ------ SI. --    EMG. 00
DVD SL12cm
```

On this screen, select the disc type. To select the disc type, press the number of the loaded disc. The selected disc type is displayed at the bottom. Selecting [1] automatically selects and displays the disc type. In case of wrong display, retry "Disc Check Memory". Also, opening the tray causes the set disc type to be cleared. In this case, set the disc type again after loading.
In performing manual operation, the disc type must be set.
Once the disc type has been selected, the sector address or time code display field will appear as shown below. These values are displayed when PLL is locked.

```
            Disc Type
1. Disc Type Auto Check
2. DVD SL   12 cm
3. DVD DL   12 cm
4. CD       12cm
5. LCD      12 cm
6. DVD SL   8 cm
7. DVD DL   8 cm
8. CD       8 cm
9. LCD      8 cm
0. Reset SLED TILT
        SA.      SI.    EMG. 00
DVD SL 12 cm
```

Display when DVD SL 12cm disc was selected

```
            Disc Type
1. Disc Type Auto Check
2. DVD SL   12 cm
3. DVD DL   12 cm
4. CD       12cm
5. LCD      12 cm
6. DVD SL   8 cm
7. DVD DL   8 cm
8. CD       8 cm
9. LCD      8 cm
0. Reset SLED TILT
         TC.——:——:—— EMG. 00
CD   12 cm
```

Display when CD 12cm disc was selected

[0] Reset SLED TILT	Reset the Sled and Tilt to initial position.
[1] Disk Type Check	Judge automatically the loaded disc. As the judged result is displayed at the bottom of screen, make sure that it is correct. If Disc Check Memory menu has not been executed after EEPROM default setting, the disc type cannot be judged. In this case, return to the initial menu and make a check for three types of discs (SL, DL, CD).
[2] to [9]	Select the loaded disc. The adjusted value is written to the address of selected disc. No further entry is necessary if [1] was selected.

2. Servo Control

```
          Servo Control
1. LD         Off R.Sled FWD
2. SP         Off L.Sled REV
3. Focus      Off
4. TRK.       Off
5. Sled       Off
6. CLVA       Off
7. FCS. Srch Off


0. Reset SLED TILT
        SA.———— SI.—— EMG. 00
DVD SL 12 cm
```

On this screen, the servo on/off control necessary for replay is executed. Normally, turn on each servo from 1 sequentially and when CLVA is turned on, the usual trace mode becomes active. In the trace mode, DVD sector address or CD time code is displayed. This is not displayed where the spindle is not locked.
The spindle could run overriding the control if the spindle system is faulty or RF is not present. In such a case, do not operate CLVA.

0	Reset SLED TILT	Reset the Sled and Tilt to initial position.
1	LD	Turn ON/OFF the laser.
2	SP	Turn ON/OFF the spindle.
3	Focus	Search the focus and turn on the focus.
4	TRK	Turn ON/OFF the tracking servo.
5	Sled	Turn ON/OFF the sled servo.
6	CLVA	Turn ON/OFF normal servo of spindle servo.
7	FCS. Srch	Apply same voltage as that of focus search to the focus drive to check the focus drive system.
→	Sled FWD	Move the sled outward. Perform this operation with the tracking servo turned off.
←	Sled REV	Move the sled inward. Perform this operation with the tracking servo turned off.
↑	Tilt UP	Move the tilt upward.
↓	Tilt DOWN	Move the tilt downward.

The following menus are normally not used.

3. Track/Layer Jump

4. Manual Adjustment

5. Auto Adjustment

The persons who do not know well about these menus should not use them.

6. Memory Check

```
EEPROM Data1
                    -- DL --
              CD LCD   SL  L0  L1
Focus Gain    xx xx    xx  xx  xx
TRK. Gain     xx xx    xx  xx  xx
FCS Balance   xx xx    xx  xx  xx
Focus Bias    xx xx    xx  xx  xx
TRV. Offset   xx xx    xx  xx  xx
L. F. Offset  xx xx    xx  xx  xx
EQ Boost      xx xx    xx  xx  xx
Mirror Time   xx xx    xx  xx  xx
_DOWN: Next Data
CLEAR: Default Set      page.1/2
```

```
EEPROM Data1
                    -- DL --
              CD LCD   SL  L0  L1
RF Jitter     xx --    xx  xx  xx
RF Level      xx --    xx  --  --
FE Level      xx --    xx  --  --
FE Balance    xx --    xx  --  --
TRV. Level    xx --    xx  --  --
Analog FRSW   xx xx    xx  xx  xx
PLL DacGain   xx xx    xx  xx  xx
_
 UP  : Prev Data
CLEAR: Default Set      page.2/2
```

This screen displays current servo adjusted data stored in the EEPROM. Though adjusted data can be initialized with the CLEAR key, they cannot be restored after initialization.
So, before clearing, make a note of the adjusted data.
For reference, the drive has been designed so that the gain center value is 20 and offset value is 80. Other values will be in a range of 10 to 80. If extreme value such as 00 or FF is set, adjustment will be faulty. In such a case, check for disc scratch or cable disconnection, then perform adjustment again.

7. Sacd Water Mark

4-12. MECHA AGING

```
      ### Mecha Aging ###



Press OPEN Key



Abort: STOP key
```

On the Test Mode Menu Screen, selecting 3 executes the aging of the mechanism. Start aging with PLAY. During aging, the repeat cycle is displayed. Aging can be aborted at any time by pressing the ■ key. After the operation is stopped, press the ■ key or RETURN key again to return to the Test Mode Menu. SEARCH Aging is only for a CD.

4-13. EMERGENCY HISTORY

```
      ### EMG. History ###

Laser Hours     CD   xxxxxxxh
                DVD  xxxxxxxh

1. 00 00 00 00  00 00 00 00
   00 00 00 00  00 00 00 00

2. 00 00 00 00  00 00 00 00
   00 00 00 00  00 00 00 00

Select: 1 - 9   Scroll: UP/DOWN
(1: Last EMG.)   Exit: RETURN
```

On the Test Mode Menu screen, selecting [4] displays the information such as servo emergency history. The history information from last 1 up to 10 can be scrolled with [↑] key or [↓] key. Also, specific information can be displayed by directly entering that number with ten keys.

The upper two lines display the laser ON total hours. Data below minutes are omitted.

Clearing History Information

Clearing laser hours
◎ Press [DISPLAY] and [CLEAR] keys in this order.
Both CD and DVD data are cleared.
Clearing emergency history
◎ Press [TITLE] and [CLEAR] keys in this order.
Initializing set up data
◎ Press [DVD] and [CLEAR] keys in this order.
The data have been initialized when "Set Up Initialized" message is displayed. The EMG. History screen will be restored soon.

How to see Emergency History

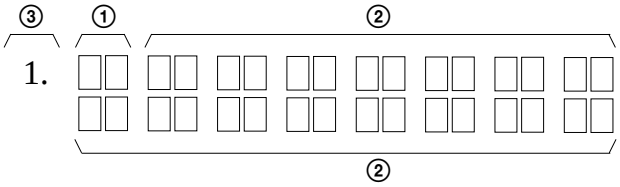

① : Emergency Code
② : Don't Care
These codes are used for verification of software designing.
③ : Historical order 1 to 9

Emergency Codes List

10: Communication to IC001 (RF-240 board) failed.
11: Each servo for focus, tracking, and spindle is unlocked.
12: Communication to EEPROM, IC101 (DVD board) failed.
13: Writing of hours meter data to EEPROM, IC101 (DVD board) failed.
14: Communication to Servo DSP IC302 (DVD board) failed, or Servo DSP is faulty.
20: Initialization of tilt servo and sled servo failed. They are not placed in the initial position.
21: Tilt servo operation error
22: Syscon made a request to move the tilt servo to wrong position.
23: Sled servo operation error
24: Syscon made a request to move the sled servo to wrong position.
30: Tracking balance adjustment error
31: Tracking gain adjustment error
32: Focus balance adjustment error
33: Focus bias adjustment error
34: Focus gain adjustment error
35: Tilt servo adjustment error
36: RF equalizer adjustment error
37: RF group delay adjustment error
38: Jitter value after adaptive servo operation is too large.
40: Focus servo does not operate.
41: With a dual layer (DL) disc, focus jump failed.50: CLV (spindle) servo does not operate.
51: Spindle does not stop.
60: With a DVD disc, Syscon made a request to seek nonexistent address.
61: With a CD disc, Syscon made a request to seek nonexistent address.
62: With a CD disc, Syscon made a request to seek nonexistent track No. and index No.
63: With a DVD disc, seeking of target address failed.
64: With a CD disc, seeking of target address failed.
65: With a CD disc, seeking of target index failed.
70: With a DVD disc, physical information data could not be read.
71: With a CD disc, TOC data could not be read.
80: Disc type judgment failed.
81: As disc type judgment failed, retry was repeated.
82: As disc type judgment failed, a measurement error occurred.
83: Disc type could not be judged within the specified time.
84: Illegal command code was received from Syscon.
85: Illegal command was received from Syscon.

4-14. VERSION INFORMATION

```
   ## Version Information ##

IF con.    Ver: x. xxx (xxxx)
           Group    00

SYScon.    Ver: x. xxx (xxxx)
           Model    xx
           Region   0x


Servo DSP Ver:X.XXX
OPT Type:2 Laser
                    Exit: RETURN
```

On the Test Mode Menu screen, selecting [5] displays the ROM version and region code.
The parenthesized hexadecimal number in version field is checksum value of ROM.

4-15. VIDEO LEVEL ADJUSTMENT

On the Test Mode Menu screen, selecting [6] displays color bars for video level adjustment. During display of color bars, OSD disappears but the menu screen will be restored if pressing any key.

Measurement point : MONITOR OUT VIDEO (75 Ω terminating resistance)
Measuring instrument : Oscilloscope
Adjustment device : RV501 on DIGITAL board
Specified value : 1.0 ± 0.02 Vpp

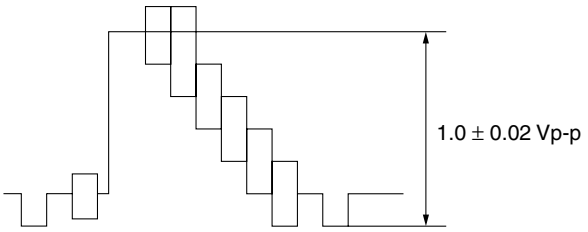

SECTION 5
ELECTRICAL ADJUSTMENT

In making adjustment, refer to 5-2. Adjustment Related Parts Arrangement.

Note: During diagnostic check, the characters and color bars can be seen only with the NTSC monitor. Therefore, for diagnostic check, use the monitor that supports both NTSC and PAL modes

This section describes procedures and instructions necessary for adjusting electrical circuits in this set.

Instruments required:
1) Color monitor TV
2) Oscilloscope 1 or 2 phenomena, band width over 100 MHz, with delay mode
3) Frequency counter (over 8 digits)
4) Digital voltmeter
5) Standard commander
   * RM-SS800 (1-418-838-11)
6) DVD reference disc
   HLX-501 (J-6090-071-A) (dual layer)
   HLX-503 (J-6090-069-A) (single layer)
   HLX-504 (J-6090-088-A) (single layer)
   HLX-505 (J-6090-089-A) (dual layer)
7) SACD reference disc
   HLXA-509 (J-6090-090-A)

   * Use only the designated remote control when adjusting this system component.

5-1. ADJUSTMENT OF VIDEO SYSTEM

1. Video Level Adjustment (DVD BOARD)

<Purpose>

This adjustment is made to satisfy the NTSC standard, and if not adjusted correctly, the brightness will be too large or small.

Mode	Video level adjustment in test mode
Signal	Color bars
Test point	MONITOR OUT (VIDEO) connector (75 Ω terminated)
Instrument	Oscilloscope
Adjusting element	RV501
Specification	1.0 ± 0.02 Vp-p

Adjusting method:
1) In the test mode initial menu “6” Video Level Adjustment, set so that color bars are generated.
2) Adjust the RV501 to attain 1.0 ± 0.02 Vp-p.

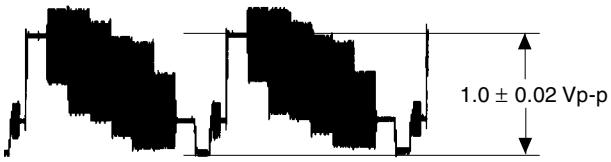

Figure 5-1

2. S-terminal Output Check

<Purpose>

Check S-terminal video output. If it is incorrect, pictures will not be displayed correctly in spite of connection to the TV with a S-terminal cable.

Mode	Video level adjustment in test mode
Signal	Color bars
Test point	S VIDEO OUT (S-Y) connector (75 Ω terminated)
Instrument	Oscilloscope
Specification	1.0 ± 0.1 Vp-p

Checking method:
1) In the test mode initial menu “6” Video Level Adjustment, set so that color bars are generated.
2) Confirm that the S-Y level is 1.0 ± 0.1 Vp-p.

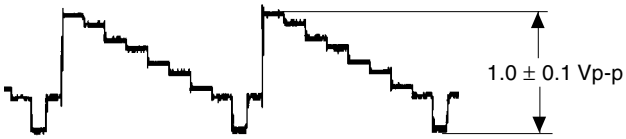

Figure 5-2

3. Checking S Video Output S-C (DVD BOARD)

<Purpose>

This checks whether the S-C satisfies the NTSC Standard. If it is not correct, the colors will be too dark or light.

Mode	Video level adjustment in test mode
Signal	Color bars
Test point	CN003 pin ②
Instrument	Oscilloscope
Specification	286 ± 50 mVp-p

Connection:

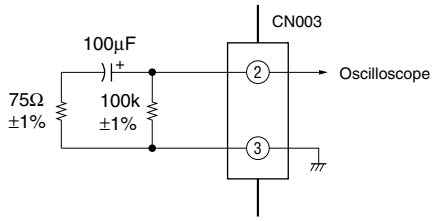

Checking method:

1) Confirm that the S-C burst is 286 ± 50 mVp-p.

Figure 5-3

5-2. ADJUSTMENT RELATED PARTS ARRANGEMENT

DVD BOARD (SIDE A)

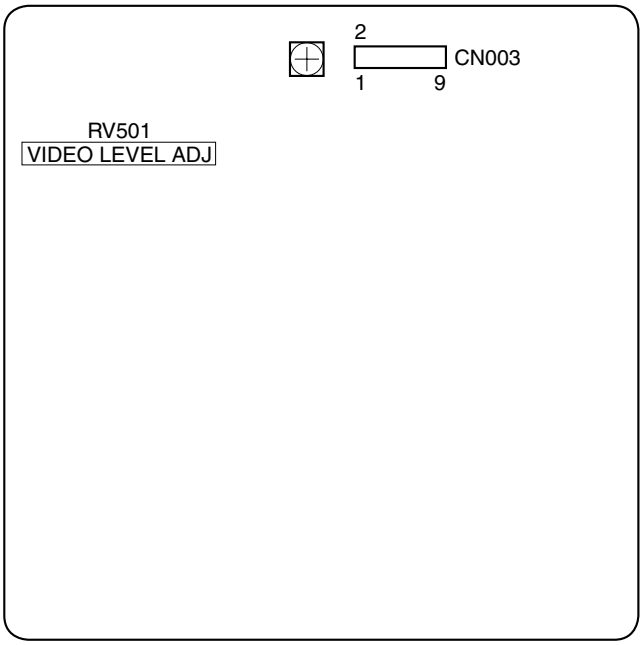

SECTION 6
DIAGRAMS

CIRCUIT BOARDS LOCATION

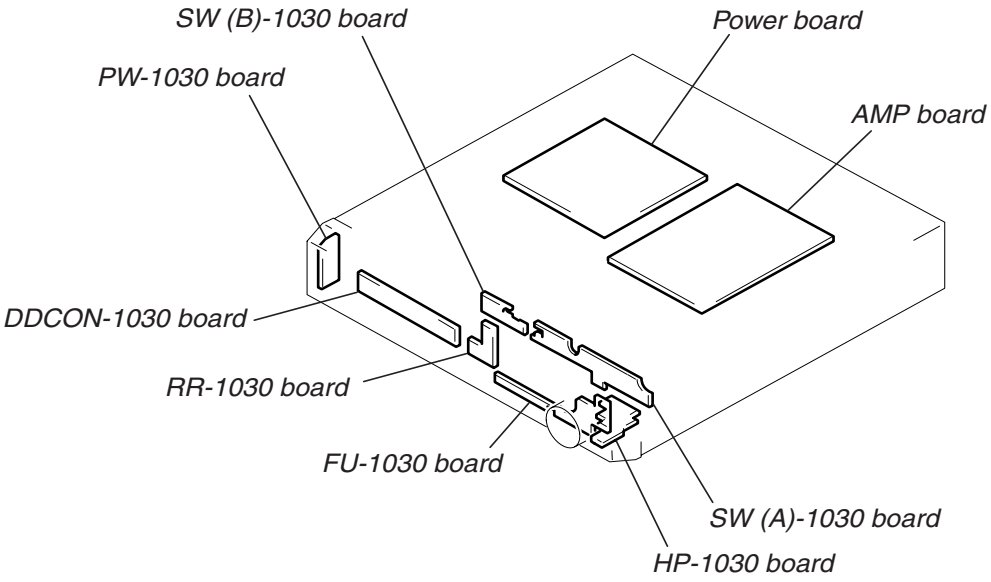

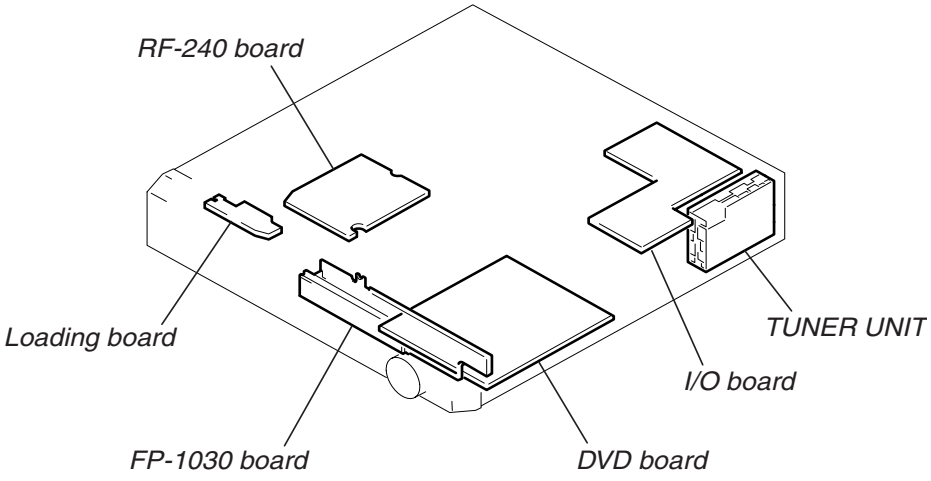

THIS NOTE IS COMMON FOR PRINTED WIRING BOARDS AND SCHEMATIC DIAGRAMS.
(In addition to this, the necessary note is printed in each block.)

For schematic diagrams.

Note:
- All capacitors are in µF unless otherwise noted. pF: µµF 50 WV or less are not indicated except for electrolytics and tantalums.
- All resistors are in Ω and ¹/₄ W or less unless otherwise specified.
- △ : internal component.
- ▭ : panel designation.

Note:	Note:
The components identified by mark ⚠ or dotted line with mark ⚠ are critical for safety. Replace only with part number specified.	Les composants identifiés par une marque ⚠ sont critiques pour la sécurité. Ne les remplacer que par une pièce portant le numéro spécifié.

- ▬ : B+ Line.
- ▬ : B– Line.
- ▭ : adjustment for repair.
- Voltages and waveforms are dc with respect to ground under no-signal (detuned) conditions.
- Voltages and waveforms are dc with respect to ground in service mode.
- Waveforms are taken with a oscilloscope. Voltage variations may be noted due to normal production tolerances. no mark : STOP
- Circled numbers refer to waveforms.
- Signal path.
  - ⇨ : FM
  - ⇨ : CD
  - ⇨ : DVD
  - ⇨ : VIDEO
  - ⇨ : Y
  - ⇨ : CHROMA
- Abbreviation

AR	: Argentina model
AUS	: Australian model
CND	: Canadian model
EA	: Saudi Arabia model
E12	: 220-240V AC area in E model
E32	: 110-240V AC area in E model
HK	: Hong Kong model
KR	: Korean model
MX	: Mexican model
MY	: Malaysia model
SP	: Singapole model
TW	: Taiwan model

For printed wiring boards.

Note:
- ○——— : parts extracted from the component side.
- ○ : Through hole.
- ▒ : Pattern from the side which enables seeing.

(The other layers' patterns are not indicated.)

Caution:	
Pattern face side: (Conductor B)	Parts on the pattern face side seen from the pattern face are indicated.
Parts face side: (Component A)	Parts on the parts face side seen from the parts face are indicated.

- **Indication of transistor**

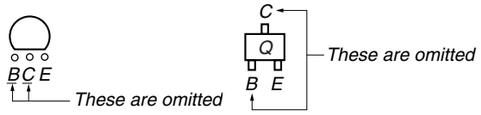

WAVEFORMS

– RF-240 BOARD –

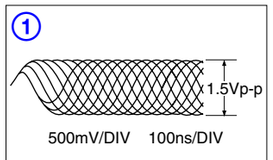

IC001 ⑤⑨ (SIGO) DVD PLAY

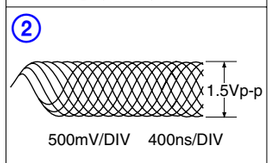

IC001 ⑤⑨ (SIGO) CD PLAY

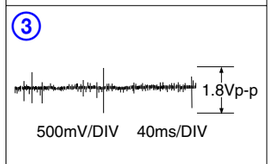

IC001 ④① (TE) DVD PLAY

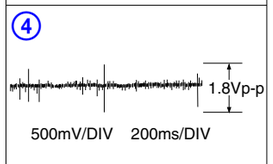

IC001 ④① (TE) CD PLAY

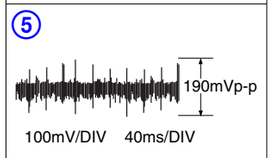

IC001 ④② (FE) DVD PLAY

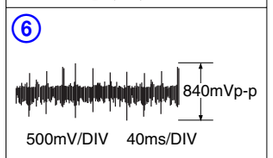

IC001 ④② (FE) CD PLAY

– DVD BOARD –

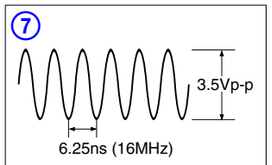

IC901 ③⑧ (X2)

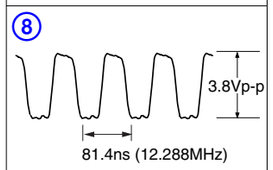

IC606 ②⓪ (XMCK)

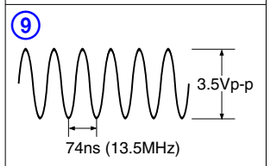

IC607 ①② (MCLK2)

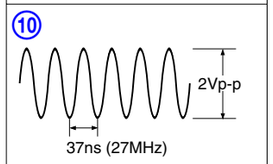

IC102 ⑦ (XTI)

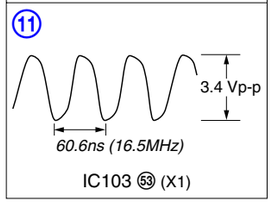

IC103 ⑤③ (X1)

– AMP BOARD –

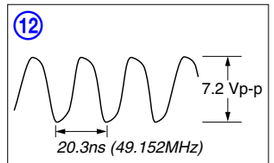

IC300 ④

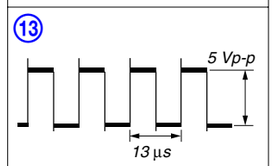

IC305 ⑬ (OUTL1+)

– I/O BOARD –

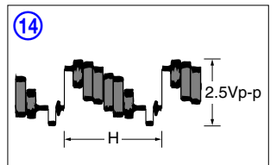

IC701 ⑭, ⑮ Test Mode (Video)

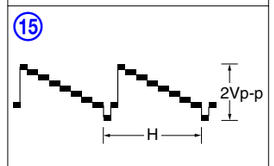

IC701 ⑨, ⑩ Test Mode (Video)

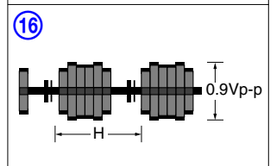

Q700 Ⓔ Test Mode (Video)

6-1. BLOCK DIAGRAMS
– RF/SERVO, VIDEO SECTION –

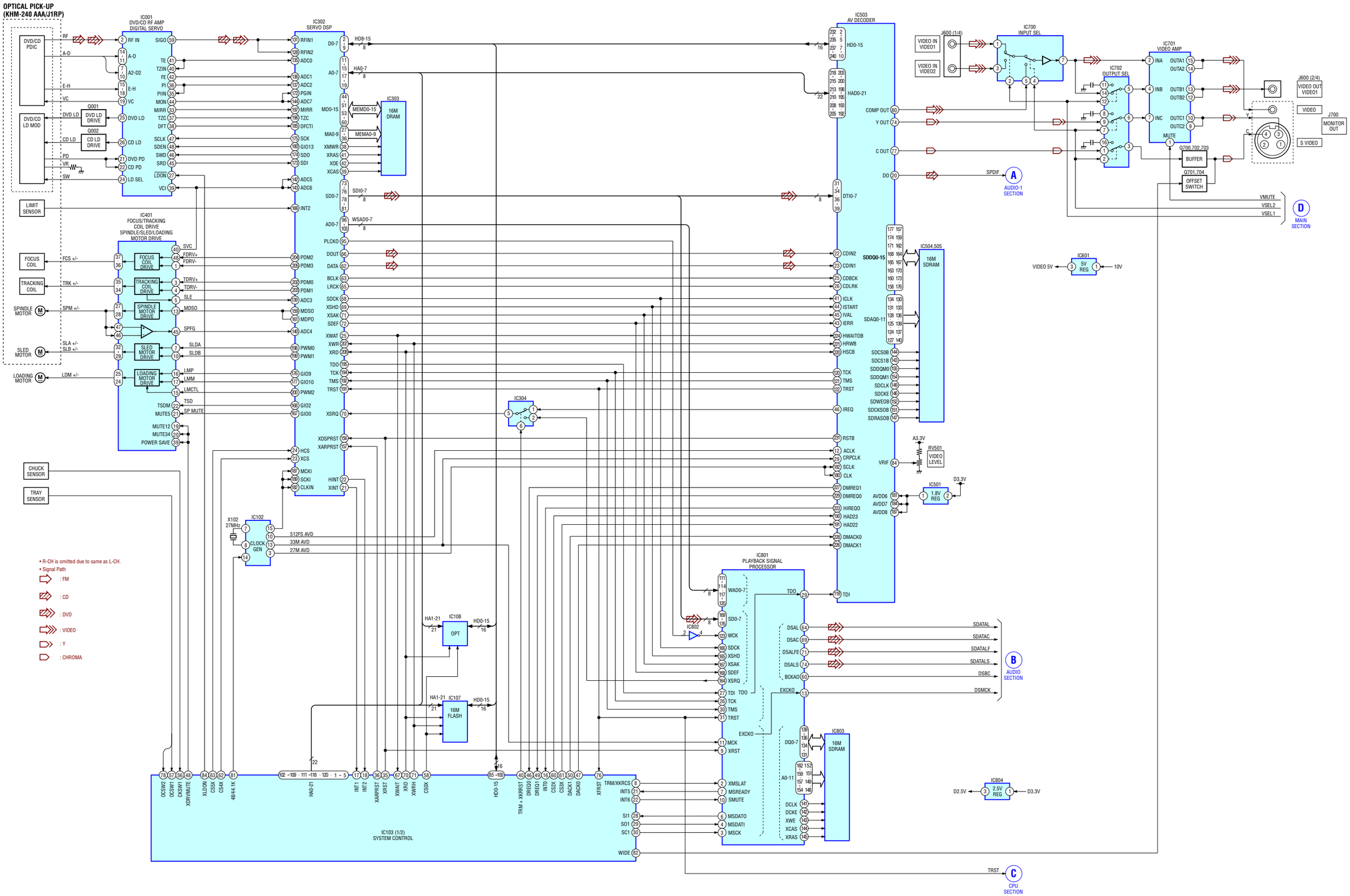

– CPU SECTION –

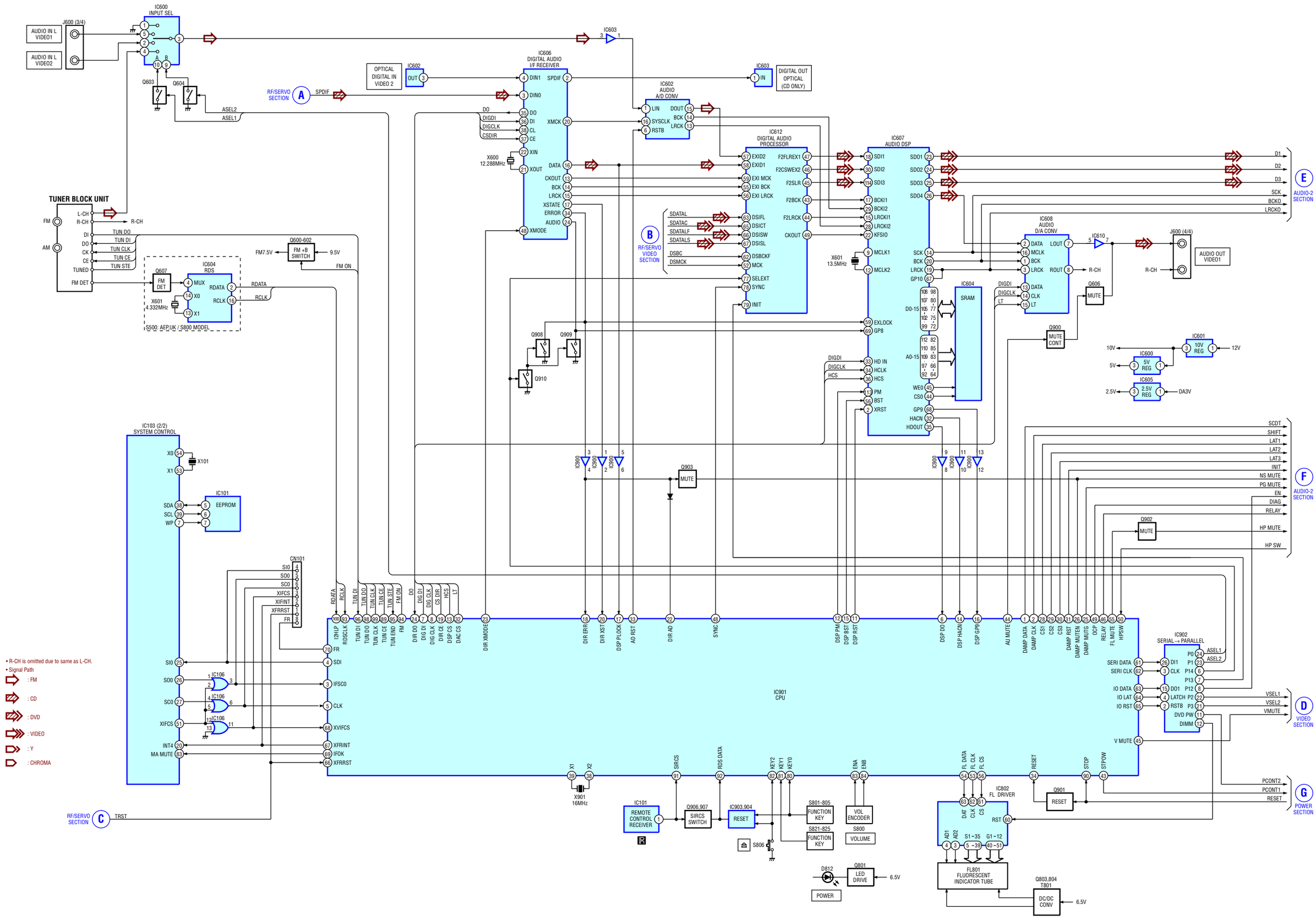
IC600 INPUT SEL
J600 (3/4)
AUDIO IN L VIDEO1
AUDIO IN L VIDEO2
Q603
Q604
ASEL2
ASEL1
OPTICAL DIGITAL IN VIDEO 2
IC602
RF/SERVO SECTION
A
SPDIF
IC606 DIGITAL AUDIO I/F RECEIVER
X600 12.288MHz
IC603
DIGITAL OUT OPTICAL (CD ONLY)
IC602 AUDIO A/D CONV
IC612 DIGITAL AUDIO PROCESSOR
B
RF/SERVO VIDEO SECTION
IC607 AUDIO DSP
X601 13.5MHz
IC604 SRAM
IC608 AUDIO D/A CONV
IC610
J600 (4/4)
AUDIO OUT VIDEO1
Q606
MUTE
Q900
MUTE CONT
IC601
10V REG
IC600
5V REG
IC605
2.5V REG
E
AUDIO-2 SECTION
TUNER BLOCK UNIT
FM
AM
L-CH
R-CH
DI
DO
CK
CE
TUNED
FM DET
TUN DO
TUN DI
TUN CLK
TUN CE
TUN STE
Q607
FM DET
IC604 RDS
X601 4.332MHz
S500: AEP,UK / S800 MODEL
FM7.5V
Q600-602
FM +B SWITCH
9.5V
FM ON
RDATA
RCLK
Q908
Q909
Q910
IC103 (2/2) SYSTEM CONTROL
X101
IC101 EEPROM
SDA
SCL
WP
CN101
SI0
SO0
SC0
XIFCS
XIFINT
XFRRST
FR
IC106
INT4
MA MUTE
TRST
RF/SERVO SECTION
C
Q903
MUTE
Q902
MUTE
IC901 CPU
IC902 SERIAL→PARALLEL
X901 16MHz
IC101 REMOTE CONTROL RECEIVER
F
AUDIO-2 SECTION
D
VIDEO SECTION
G
POWER SECTION
Q906,907 SIRCS SWITCH
IC903,904 RESET
S801-805 FUNCTION KEY
S821-825 FUNCTION KEY
S806
VOL ENCODER
S800 VOLUME
D812
POWER
Q801 LED DRIVE
6.5V
IC802 FL DRIVER
FL801 FLUORESCENT INDICATOR TUBE
Q901 RESET
Q800,804 T801 DC/DC CONV
• R-CH is omitted due to same as L-CH.
• Signal Path
: FM
: CD
: DVD
: VIDEO
: Y
: CHROMA

– POWER SECTION –

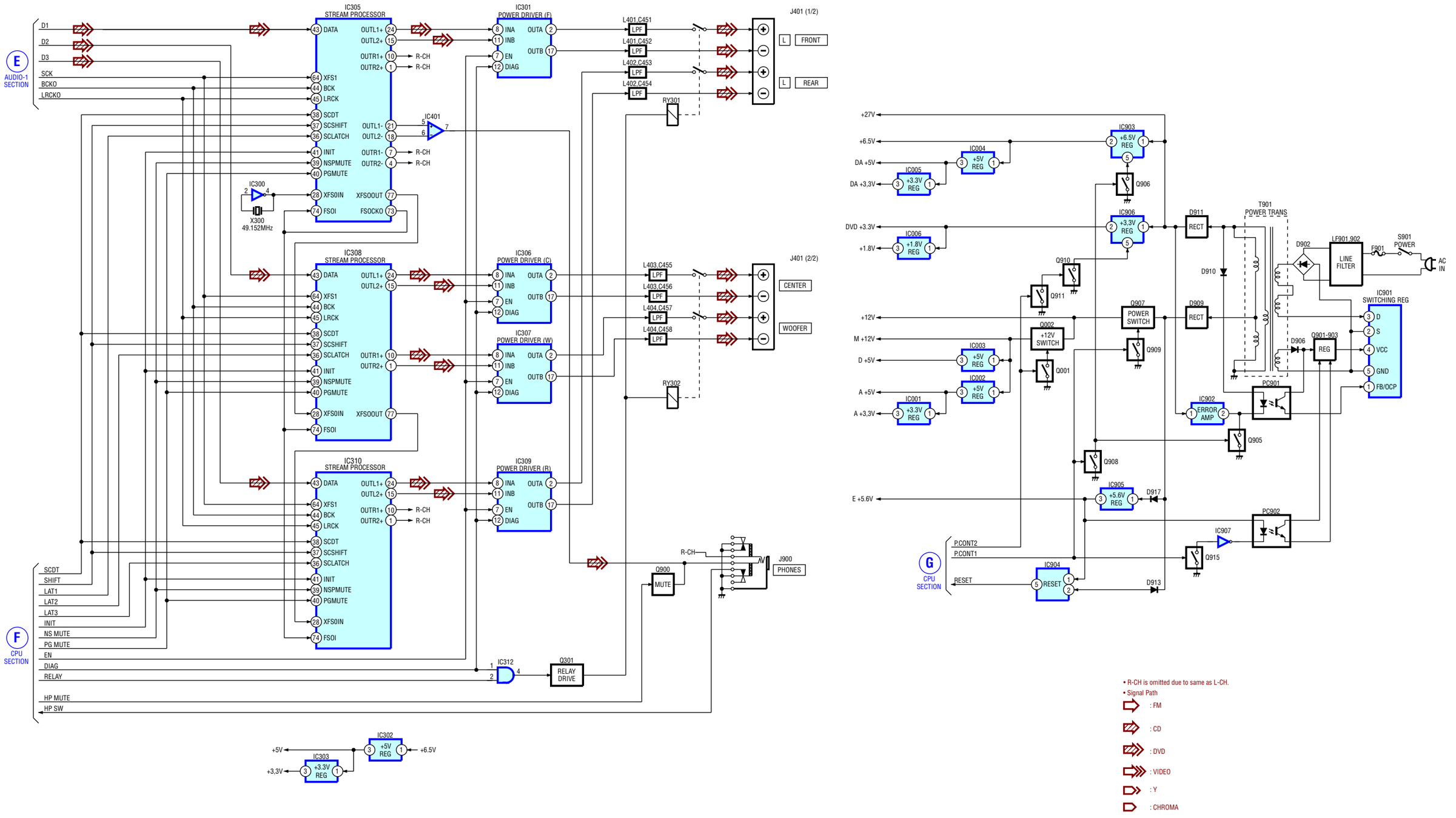

• R-CH is omitted due to same as L-CH.
• Signal Path
: FM
: CD
: DVD
: VIDEO
: Y
: CHROMA

6-2. PRINTED WIRING BOARD – RF SECTION –

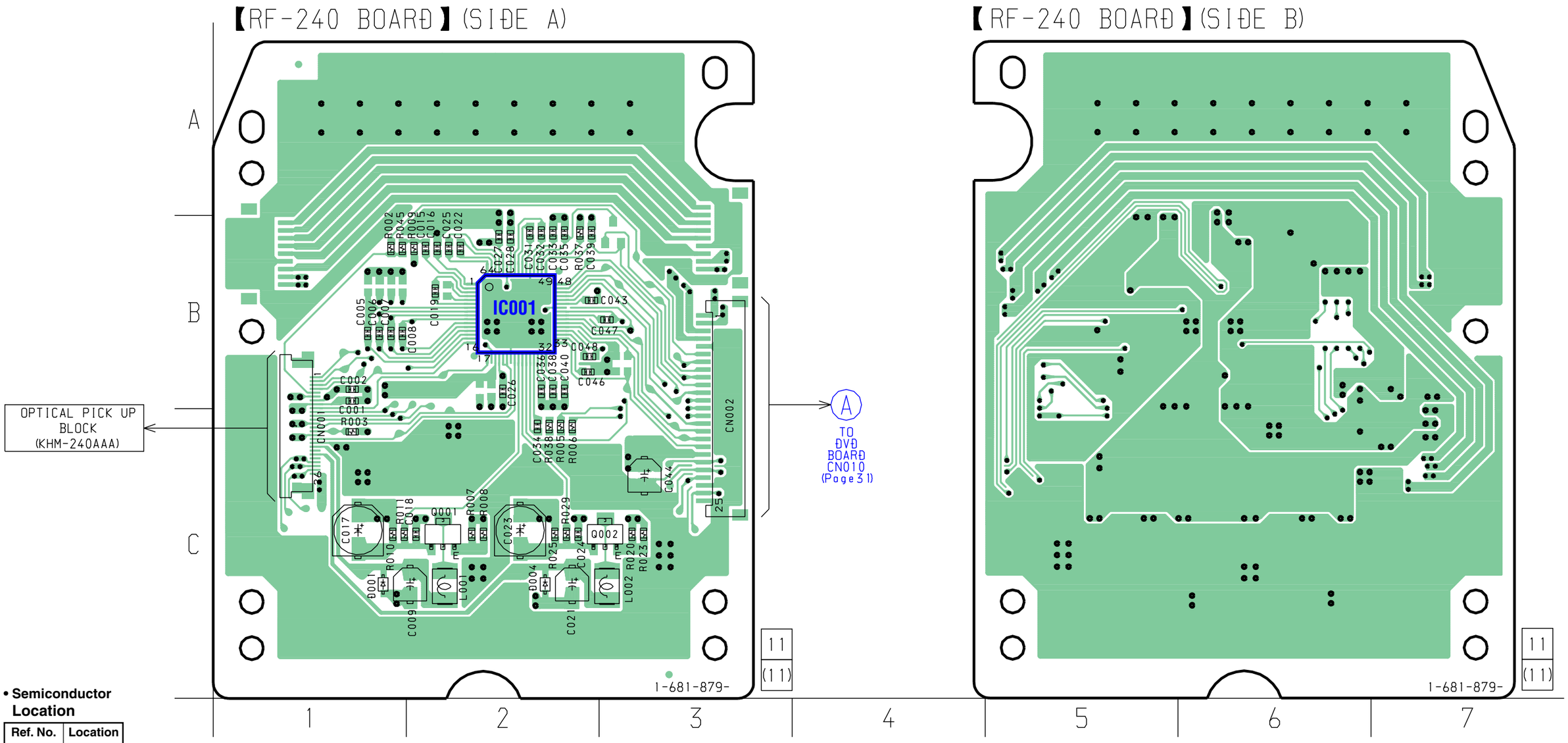

• **Semiconductor Location**

Ref. No.	Location
D001	C-1
D004	C-2
IC001	C-2
Q001	C-2
Q002	C-3

6-3. SCHEMATIC DIAGRAM – RF SECTION –

• See page 25 for Wavefoms. • See page 58 for IC Block Diagrams.

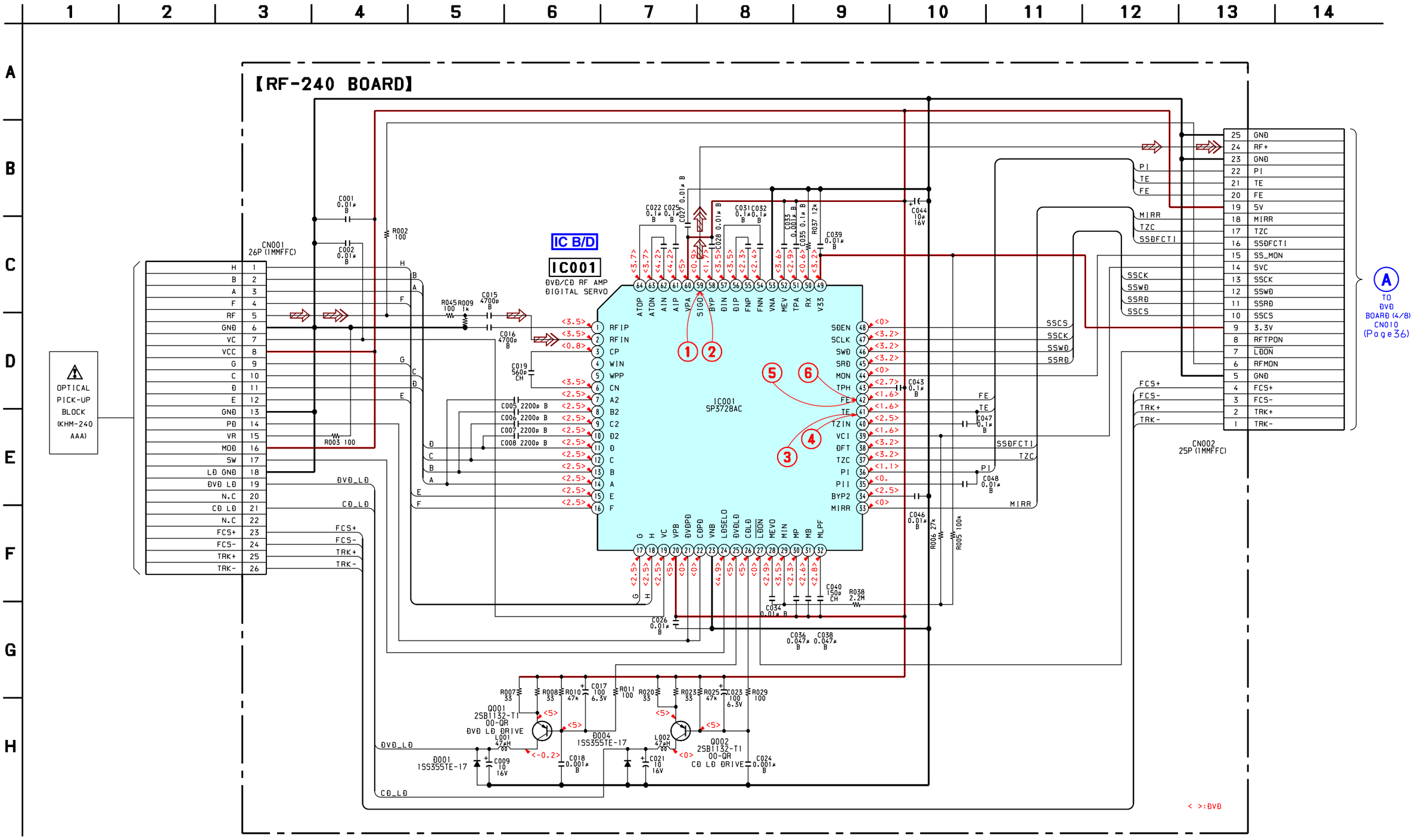

6-4. PRINTED WIRING BOARD – DVD SECTION (1/2) –

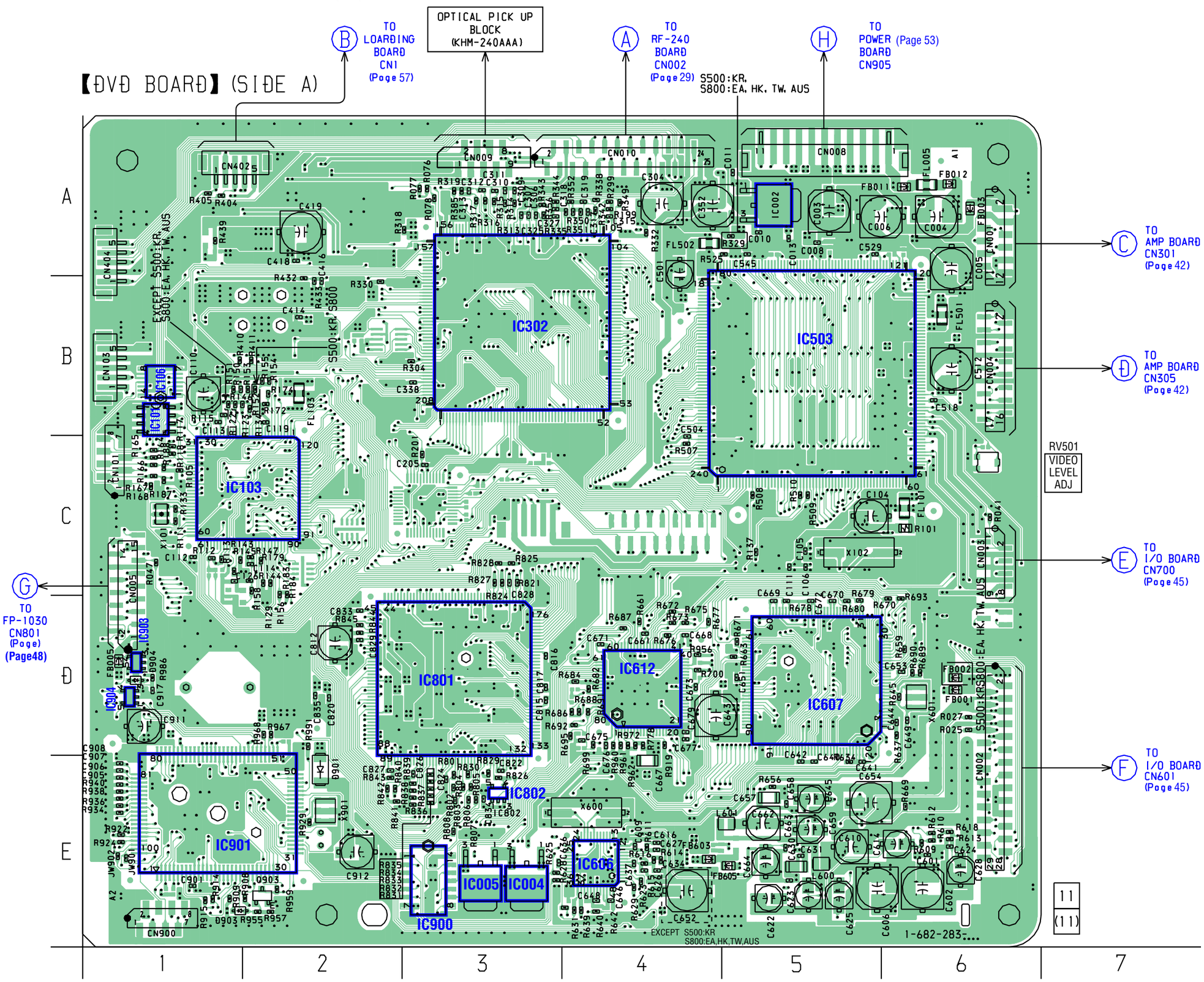

• Semiconductor Location

Ref. No.	Location
D901	E-2
D903	E-1
D904	D-1
IC002	A-5
IC004	E-3
IC005	E-3
IC101	B-1
IC103	C-2
IC106	B-1
IC302	B-3
IC503	B-5
IC606	E-4
IC607	D-5
IC612	D-4
IC801	D-3
IC802	E-3
IC900	E-3
IC901	E-2
IC903	D-1
IC904	D-1
Q903	E-2

6-5. PRINTED WIRING BOARD – DVD SECTION (2/2) –

【DVD BOARD】(SIDE B)

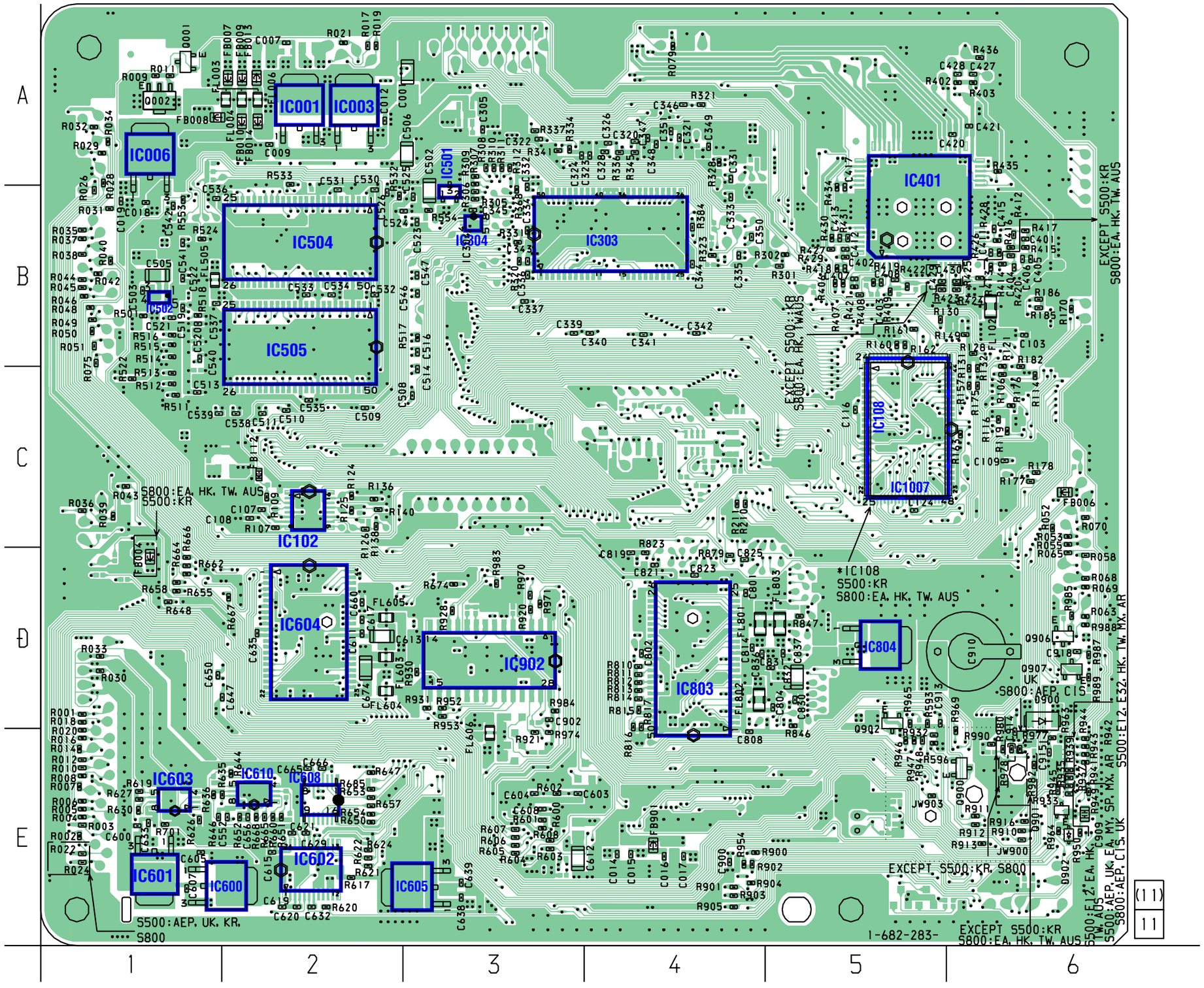

• Semiconductor Location

Ref. No.	Location
D900	D-6
D902	E-6
IC001	A-2
IC003	A-2
IC006	A-1
IC102	C-2
IC107	C-5
IC108	C-5
IC303	B-4
IC304	B-3
IC401	B-5
IC501	B-3
IC504	B-2
IC505	B-2
IC600	E-1
IC601	E-1
IC602	E-2
IC603	E-1
IC604	D-2
IC605	E-3
IC608	E-2
IC610	E-2
IC803	D-4
IC804	D-5
IC902	D-3
Q001	A-1
Q002	A-1
Q900	E-6
Q901	E-6
Q902	D-5
Q906	D-6
Q907	D-6

6-6. SCHEMATIC DIAGRAM – DVD (1/8) SECTION –

• See page 25 for Wavefoms. • See page 56 for IC Block Diagrams.

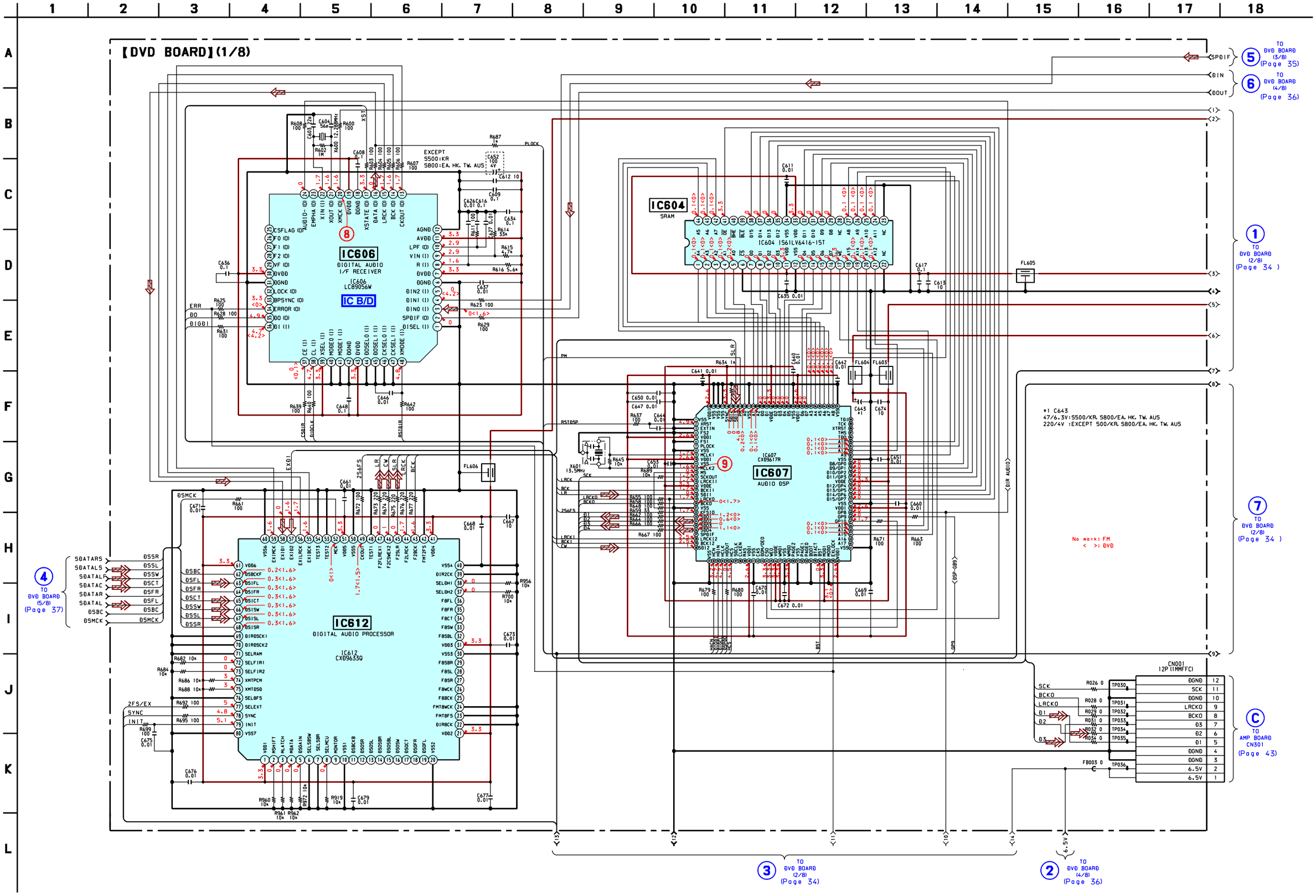

6-7. SCHEMATIC DIAGRAM – DVD (2/8) SECTION –

• See page 25 for Wavefoms.

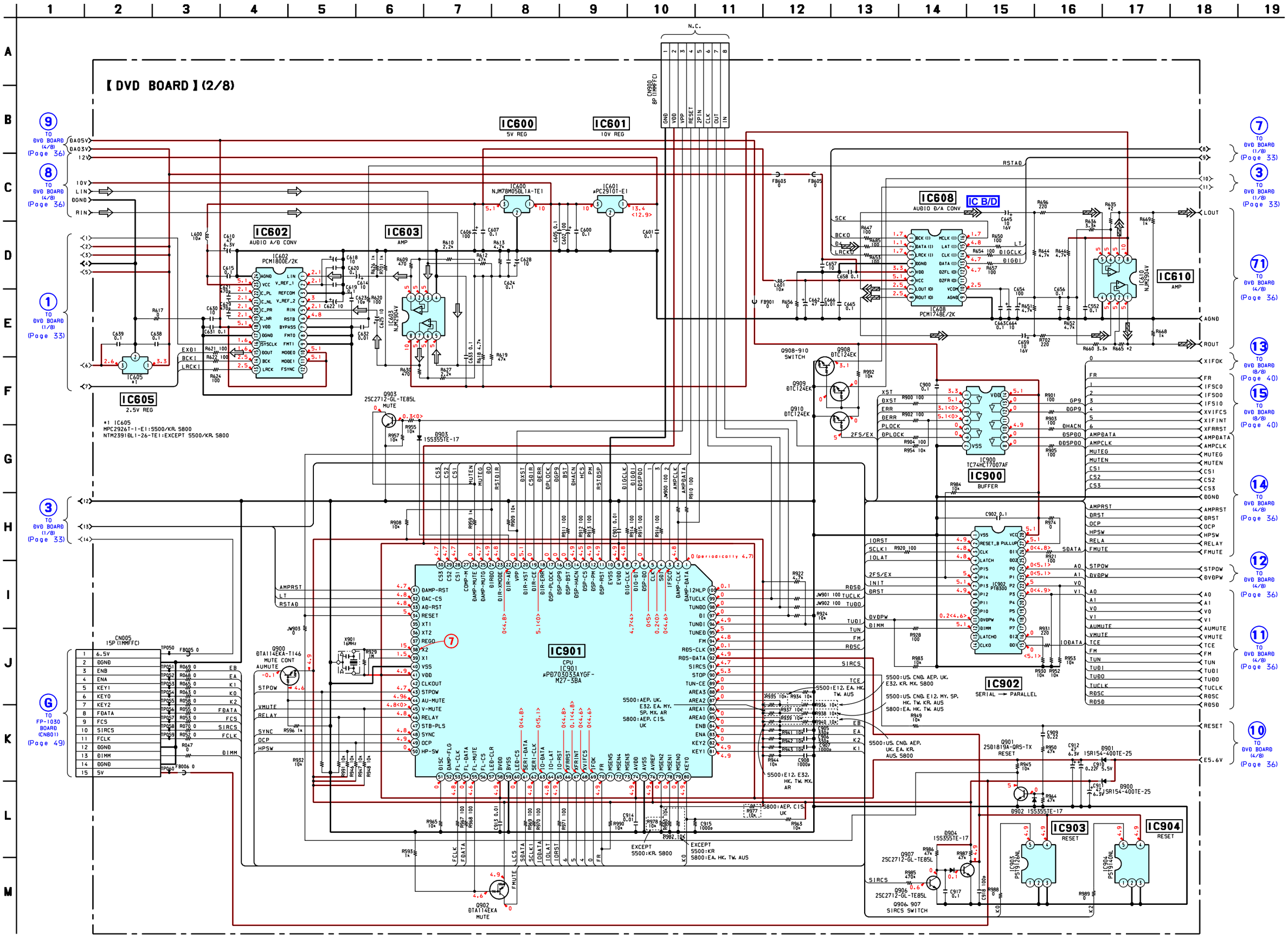

6-8. SCHEMATIC DIAGRAM – DVD (3/8) SECTION –

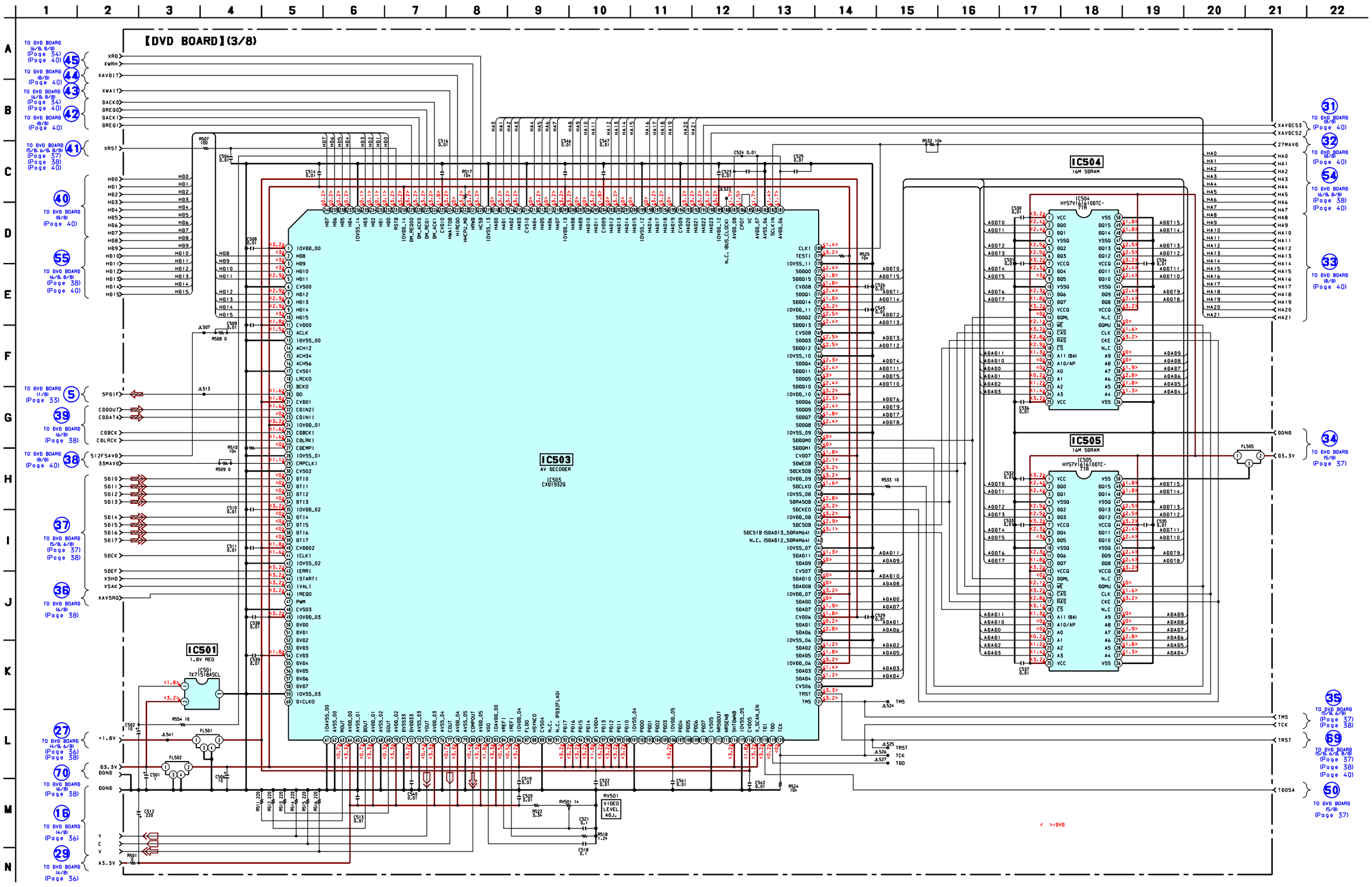

6-9. SCHEMATIC DIAGRAM – DVD (4/8) SECTION –

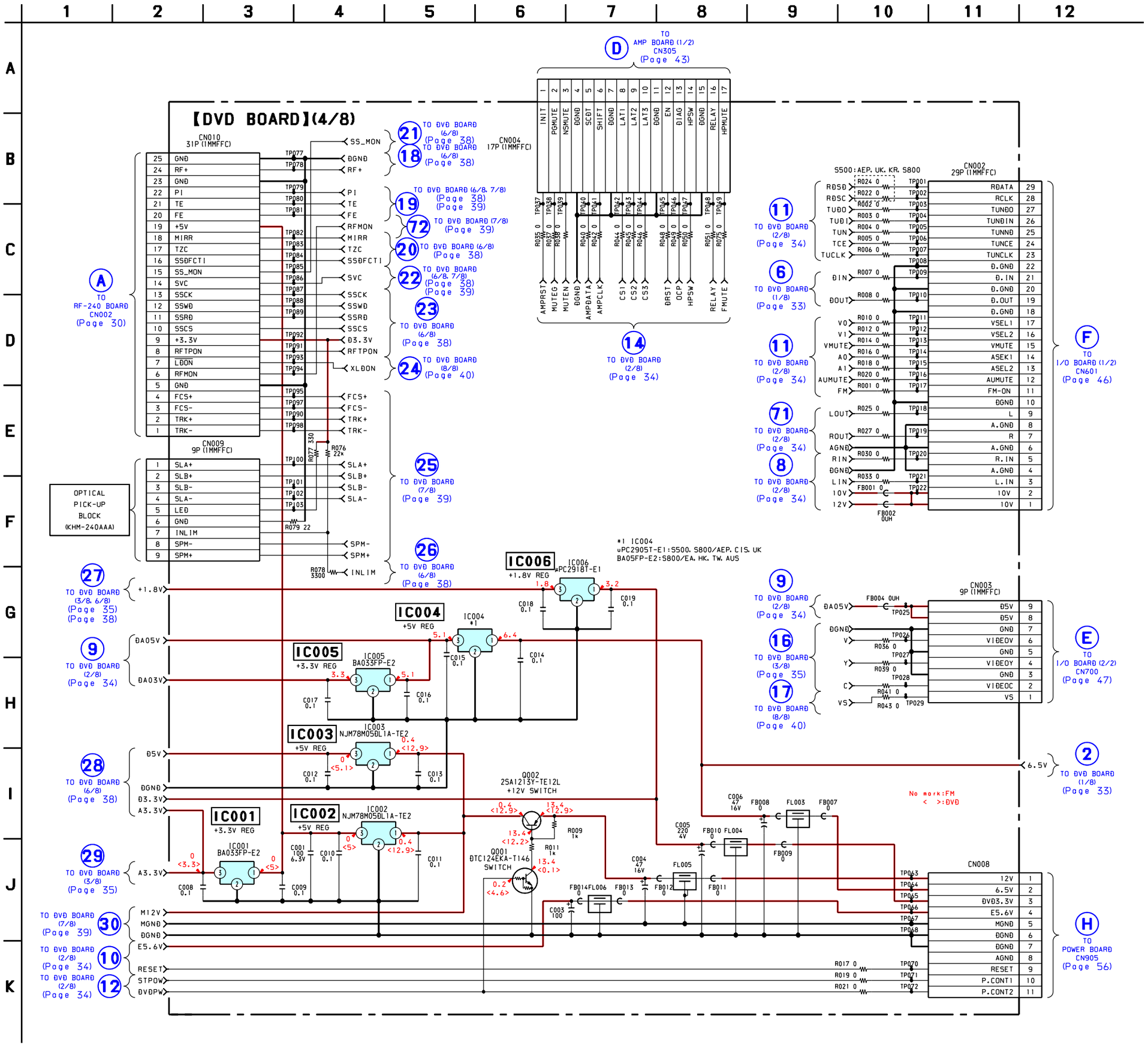

6-10. SCHEMATIC DIAGRAM – DVD (5/8) SECTION –

• See page 67 for IC Pin Function Description.

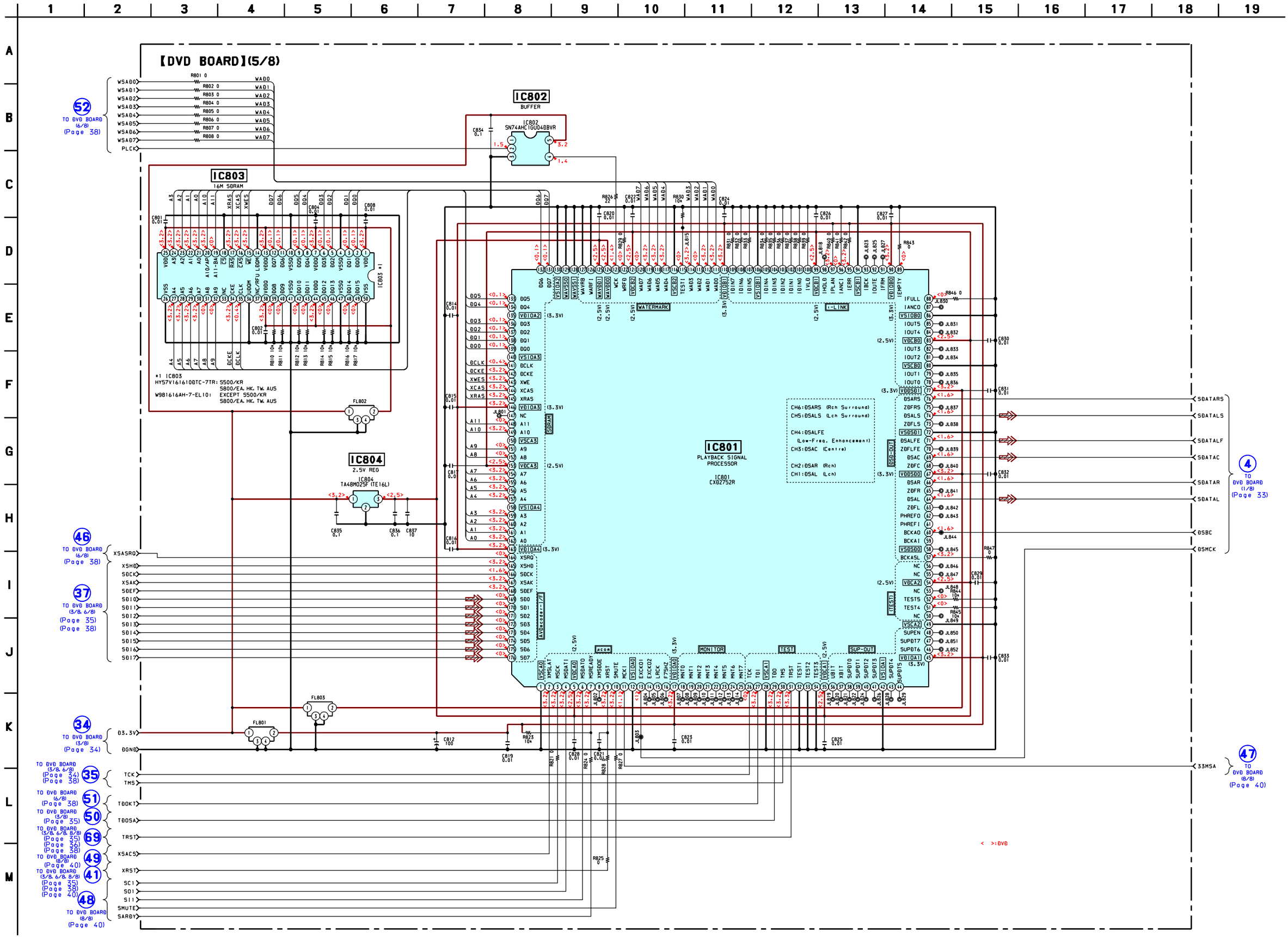

6-11. SCHEMATIC DIAGRAM – DVD (6/8) SECTION –

• See page 62 for IC Pin Function Description.

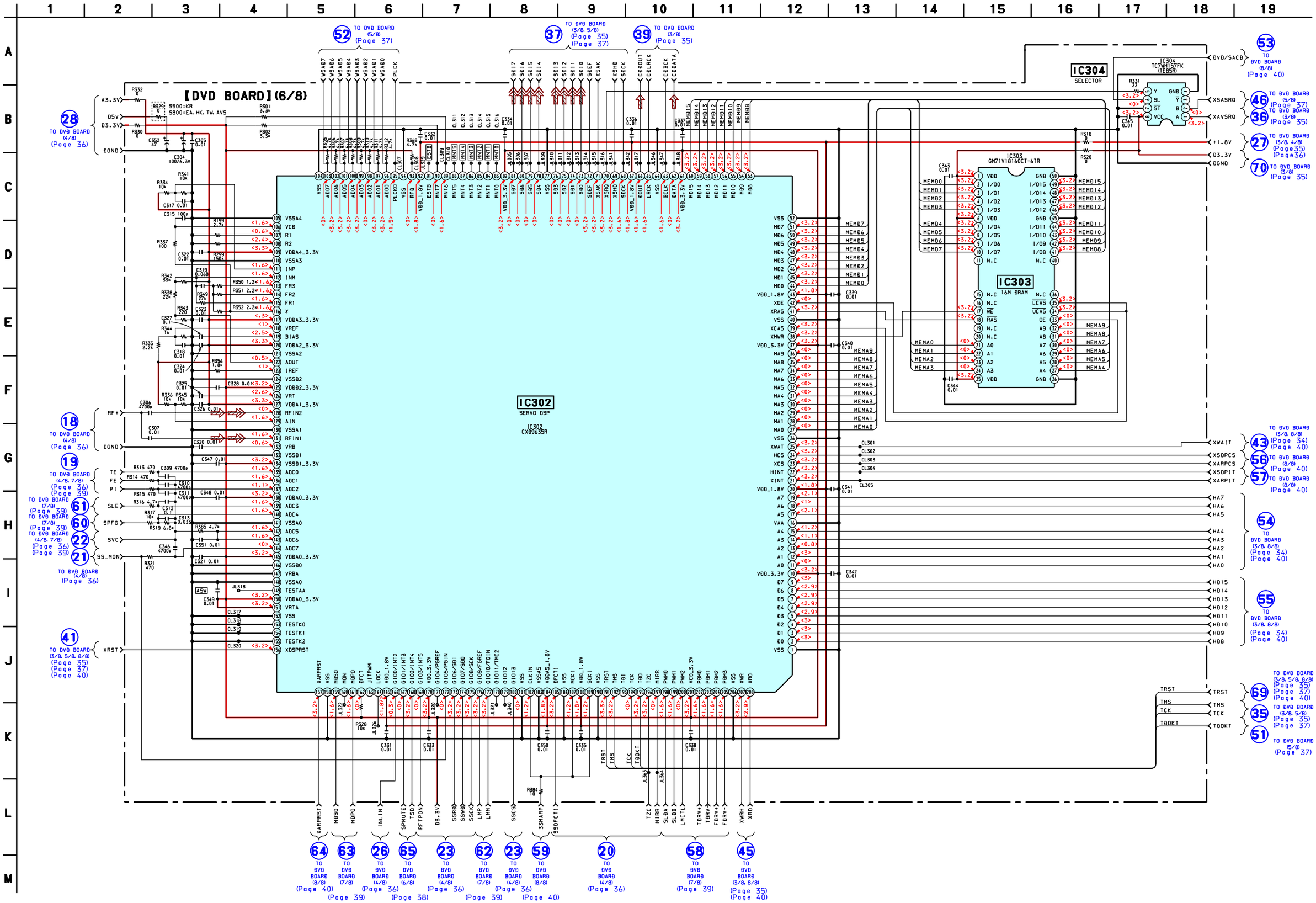

6-12. SCHEMATIC DIAGRAM – DVD (7/8) SECTION –

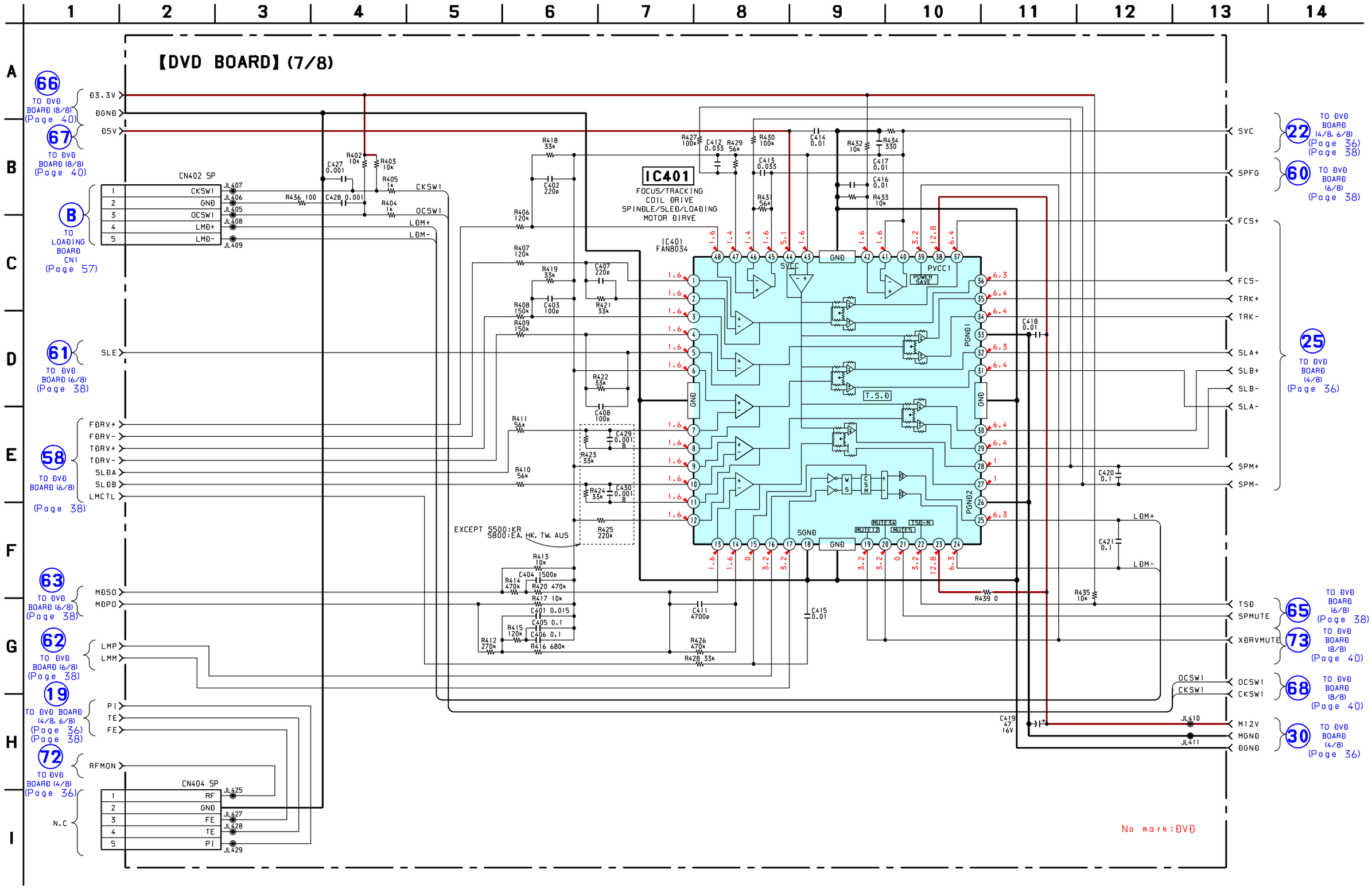

6-13. SCHEMATIC DIAGRAM – DVD (8/8) SECTION –

• See page 25 for Wavefoms. • See page 56 for IC Block Diagrams. • See page 60 for IC Pin Function Description.

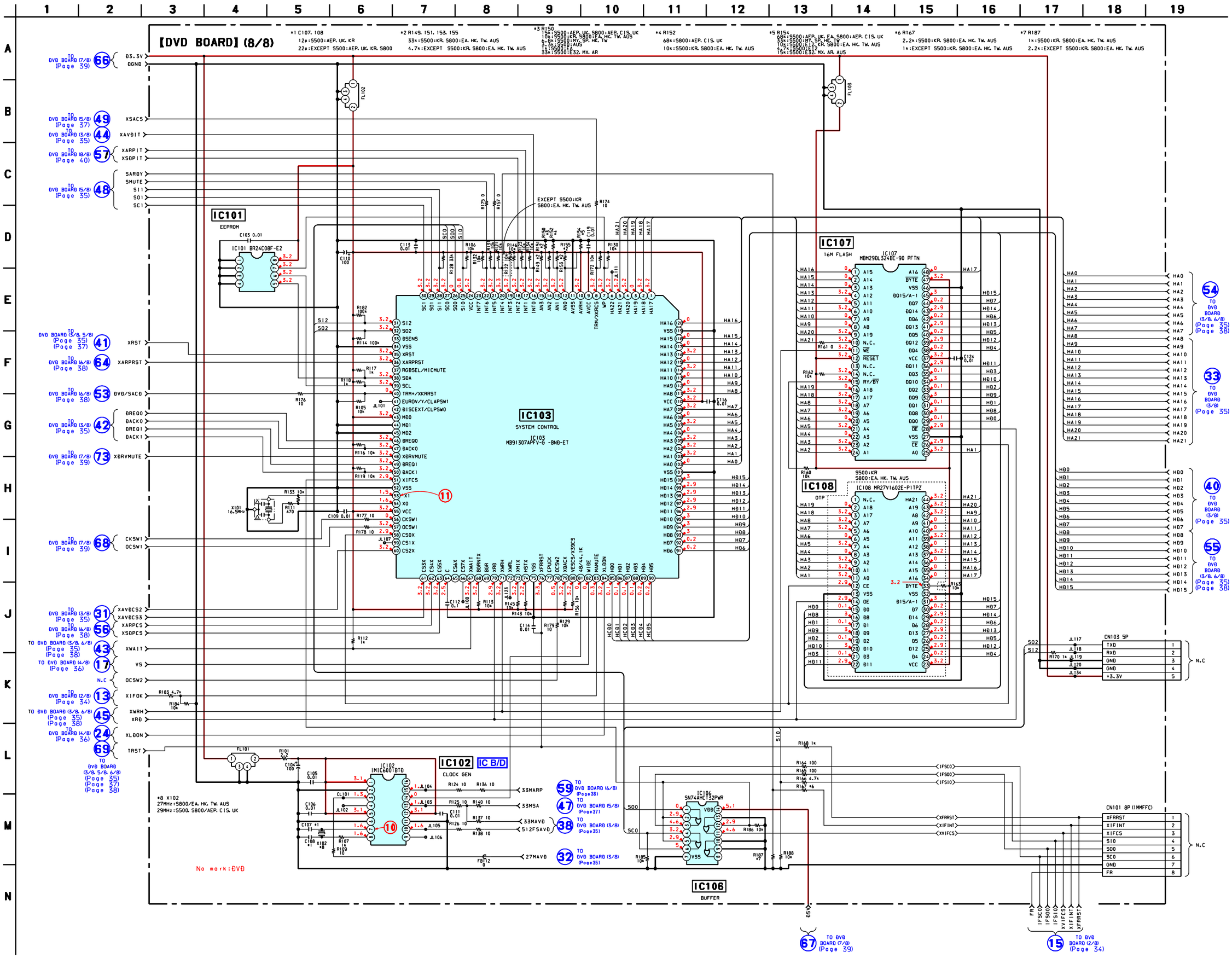

6-14. PRINTED WIRING BOARD – AMP SECTION (1/2) –

【AMP BOARD】(SIDE A)

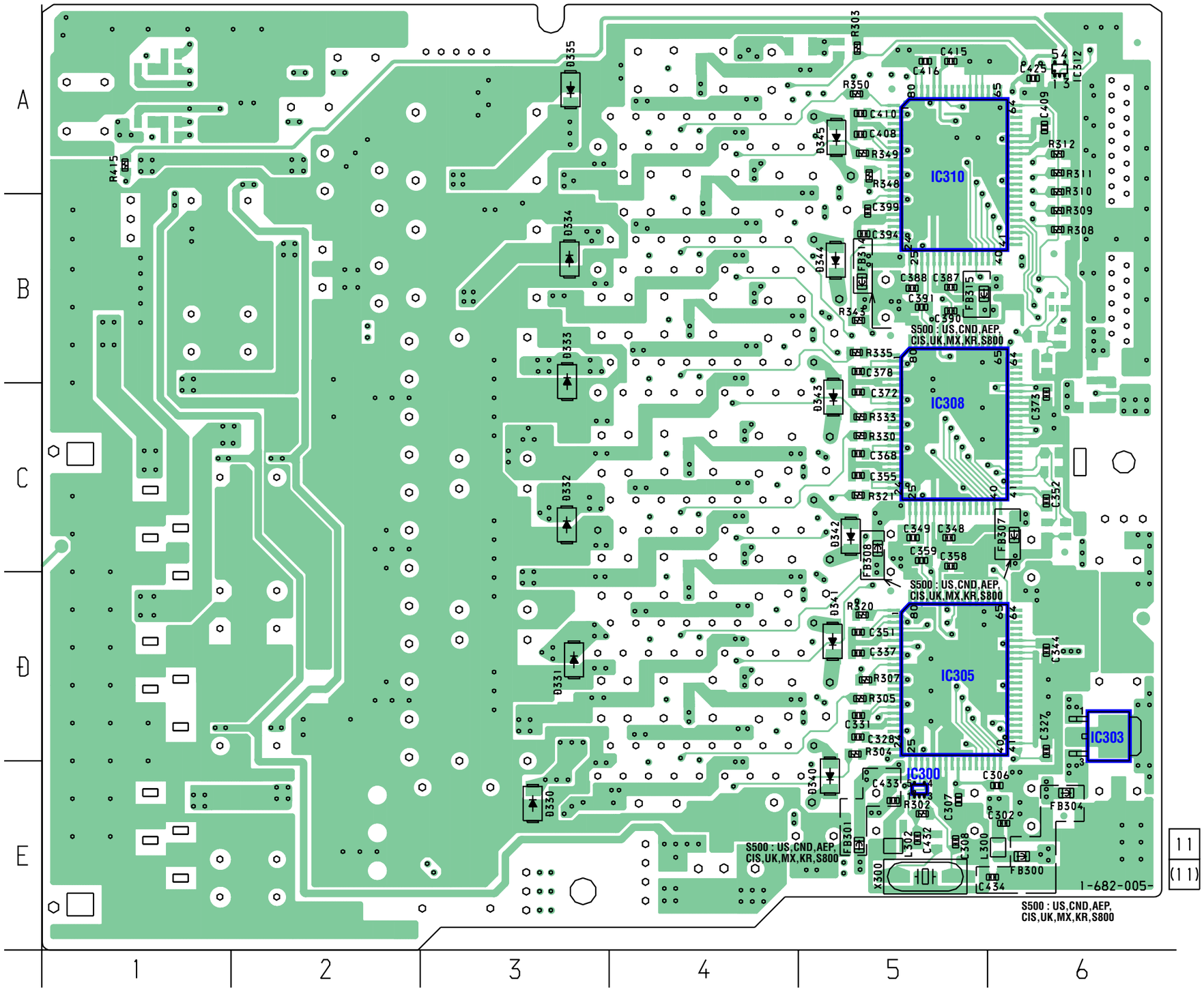

• Semiconductor Location

Ref. No.	Location
D330	E-3
D331	D-3
D332	C-3
D333	B-3
D334	B-3
D335	A-3
D340	E-5
D341	D-5
D342	C-5
D343	C-5
D344	B-5
D345	A-5
IC300	E-5
IC303	E-6
IC305	D-5
IC308	C-5
IC310	A-5
IC312	A-6

6-15. PRINTED WIRING BOARD – AMP SECTION (2/2) –

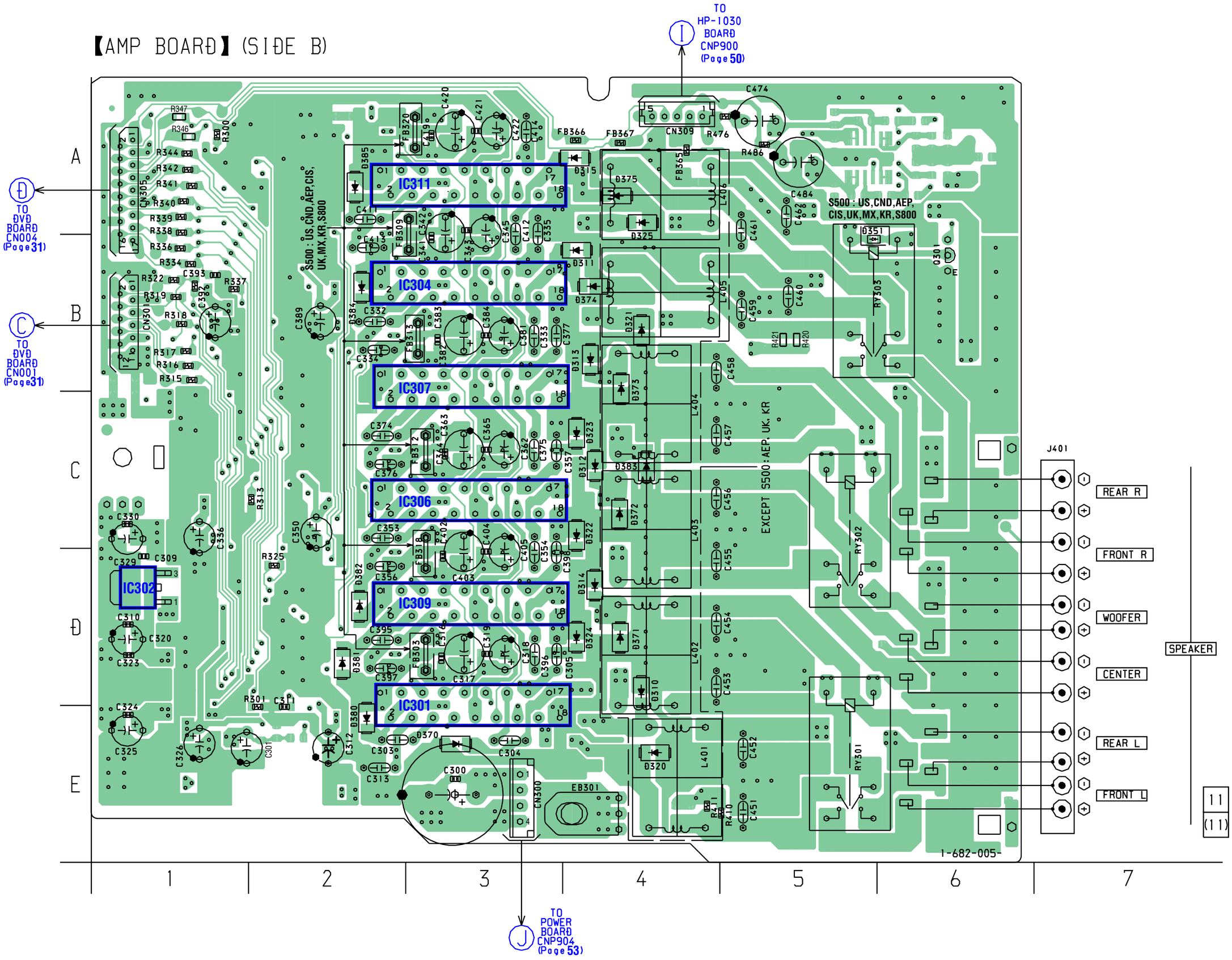

• Semiconductor Location

Ref. No.	Location
D310	D-4
D311	B-4
D312	C-4
D313	B-4
D314	D-4
D315	A-4
D320	E-4
D321	B-4
D322	C-4
D323	C-4
D324	D-4
D325	A-4
D351	B-5
D370	E-3
D371	D-4
D372	C-4
D373	B-4
D374	B-4
D375	A-4
D380	E-2
D381	D-2
D382	D-2
D383	C-4
D384	B-2
D385	A-2
IC301	E-3
IC302	D-1
IC304	B-3
IC306	C-3
IC307	B-3
IC309	D-3
IC311	A-3
Q301	B-6

6-16. SCHEMATIC DIAGRAM – AMP SECTION (1/2) –

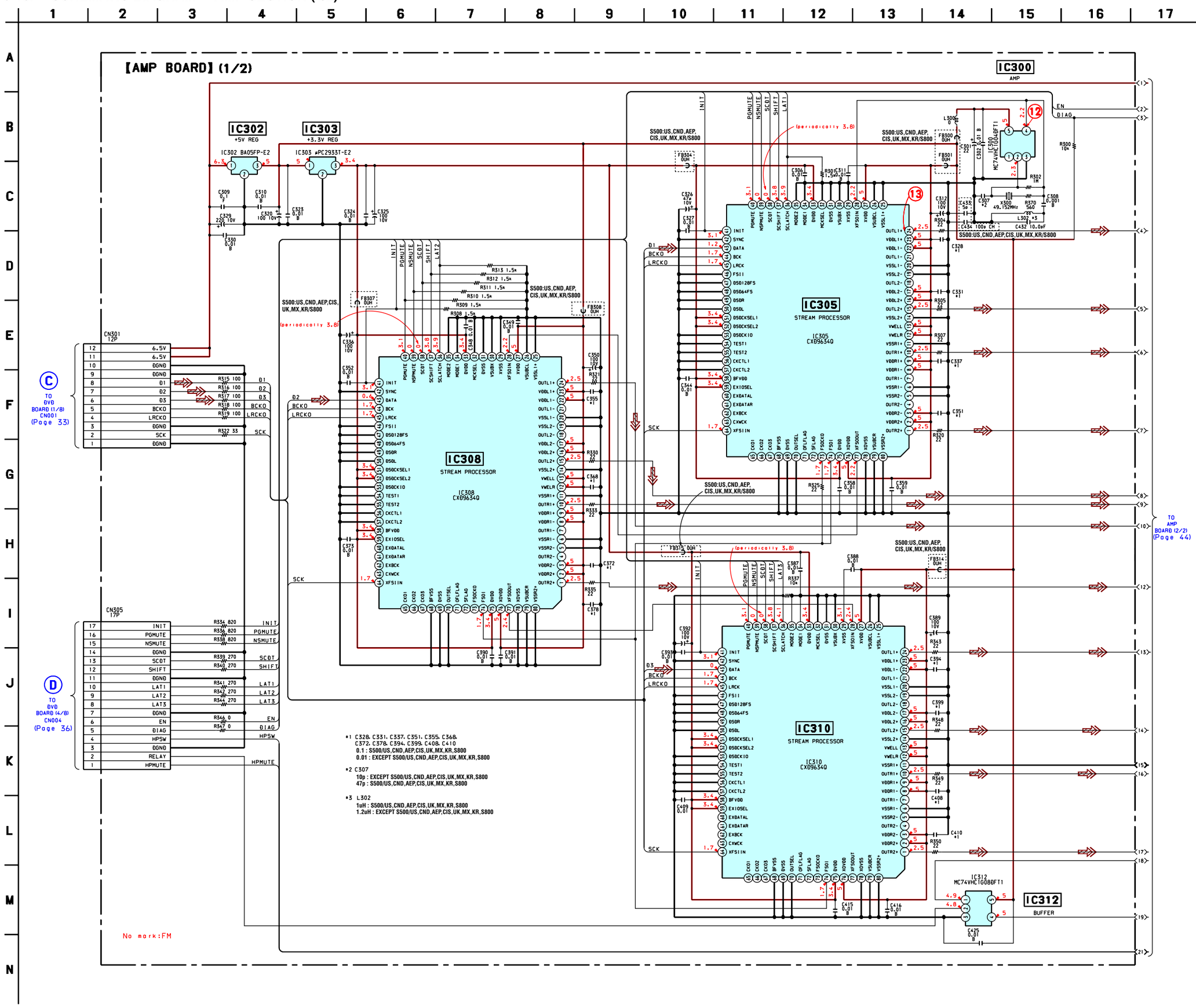

*1 C328, C331, C337, C351, C355, C368, C372, C378, C394, C399, C408, C410
0.1 : S500/US,CND,AEP,CIS,UK,MX,KR,S800
0.01 : EXCEPT S500/US,CND,AEP,CIS,UK,MX,KR,S800

*2 C307
10p : EXCEPT S500/US,CND,AEP,CIS,UK,MX,KR,S800
47p : S500/US,CND,AEP,CIS,UK,MX,KR,S800

*3 L302
1uH : S500/US,CND,AEP,CIS,UK,MX,KR,S800
1.2uH : EXCEPT S500/US,CND,AEP,CIS,UK,MX,KR,S800

6-17. SCHEMATIC DIAGRAM – AMP SECTION (2/2) –

• See page 25 for Wavefoms.

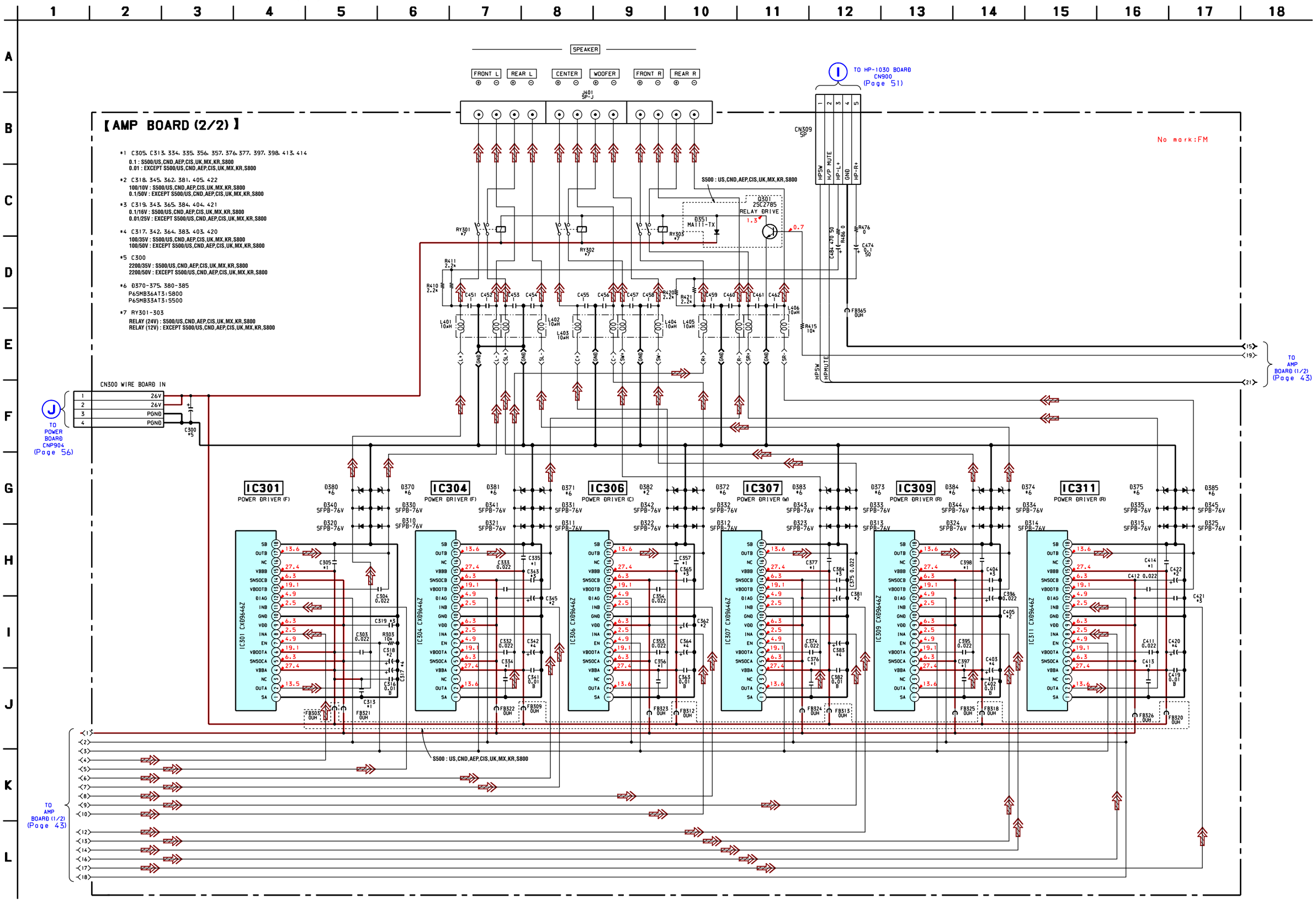

*1 C305, C313, 334, 335, 356, 357, 376, 377, 397, 398, 413, 414
0.1 : S500/US,CND,AEP,CIS,UK,MX,KR,S800
0.01 : EXCEPT S500/US,CND,AEP,CIS,UK,MX,KR,S800

*2 C318, 345, 362, 381, 405, 422
100/10V : S500/US,CND,AEP,CIS,UK,MX,KR,S800
0.1/50V : EXCEPT S500/US,CND,AEP,CIS,UK,MX,KR,S800

*3 C319, 343, 365, 384, 404, 421
0.1/16V : S500/US,CND,AEP,CIS,UK,MX,KR,S800
0.01/25V : EXCEPT S500/US,CND,AEP,CIS,UK,MX,KR,S800

*4 C317, 342, 364, 383, 403, 420
100/35V : S500/US,CND,AEP,CIS,UK,MX,KR,S800
100/50V : EXCEPT S500/US,CND,AEP,CIS,UK,MX,KR,S800

*5 C300
2200/35V : S500/US,CND,AEP,CIS,UK,MX,KR,S800
2200/50V : EXCEPT S500/US,CND,AEP,CIS,UK,MX,KR,S800

*6 D370-375, 380-385
P6SMB36AT3:S800
P6SMB33AT3:S500

*7 RY301-303
RELAY (24V) : S500/US,CND,AEP,CIS,UK,MX,KR,S800
RELAY (12V) : EXCEPT S500/US,CND,AEP,CIS,UK,MX,KR,S800

6-18. PRINTED WIRING BOARD – I/O SECTION –

【I/O BOARD】(SIDE A)

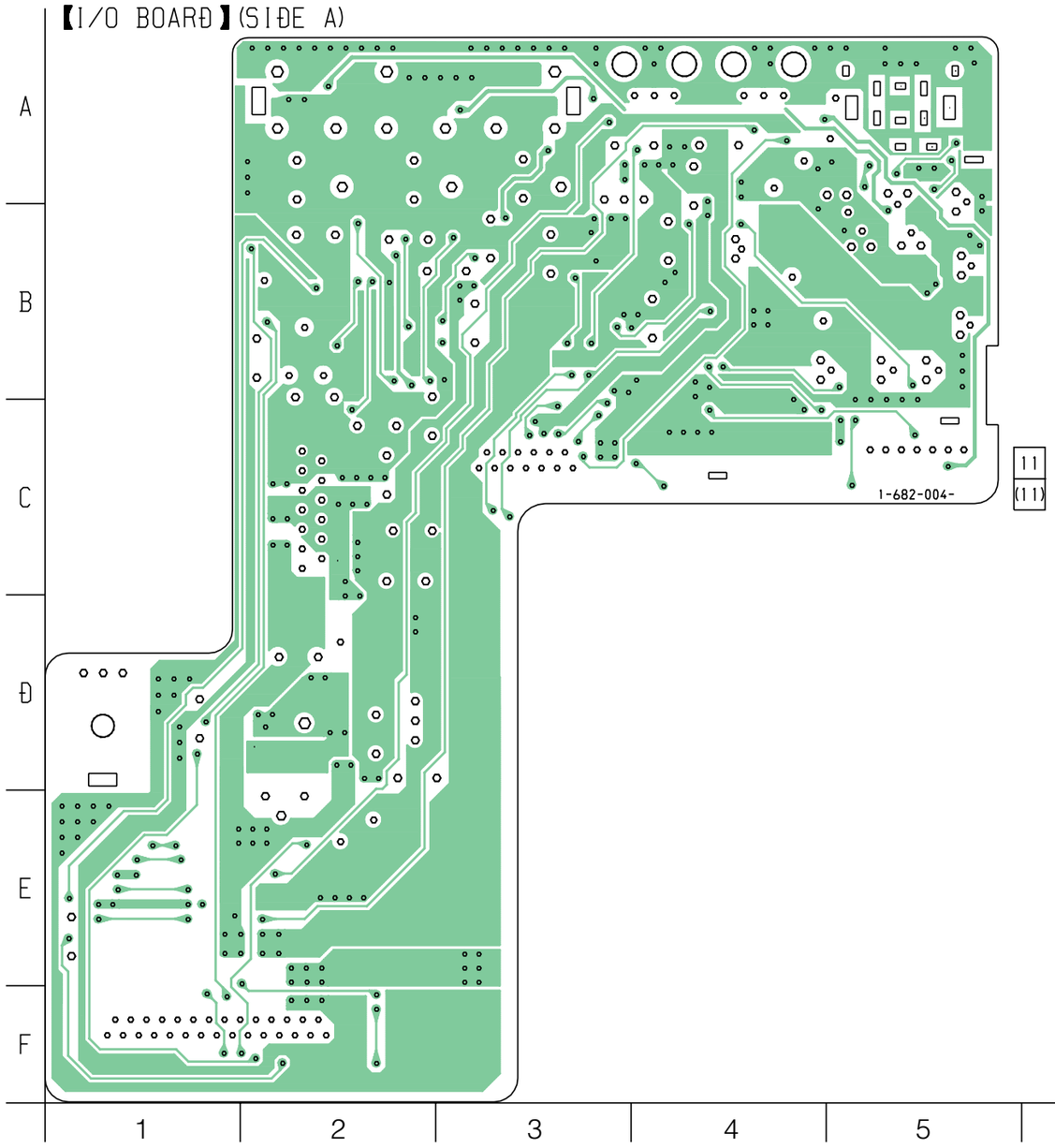

【I/O BOARD】 (SIDE B)

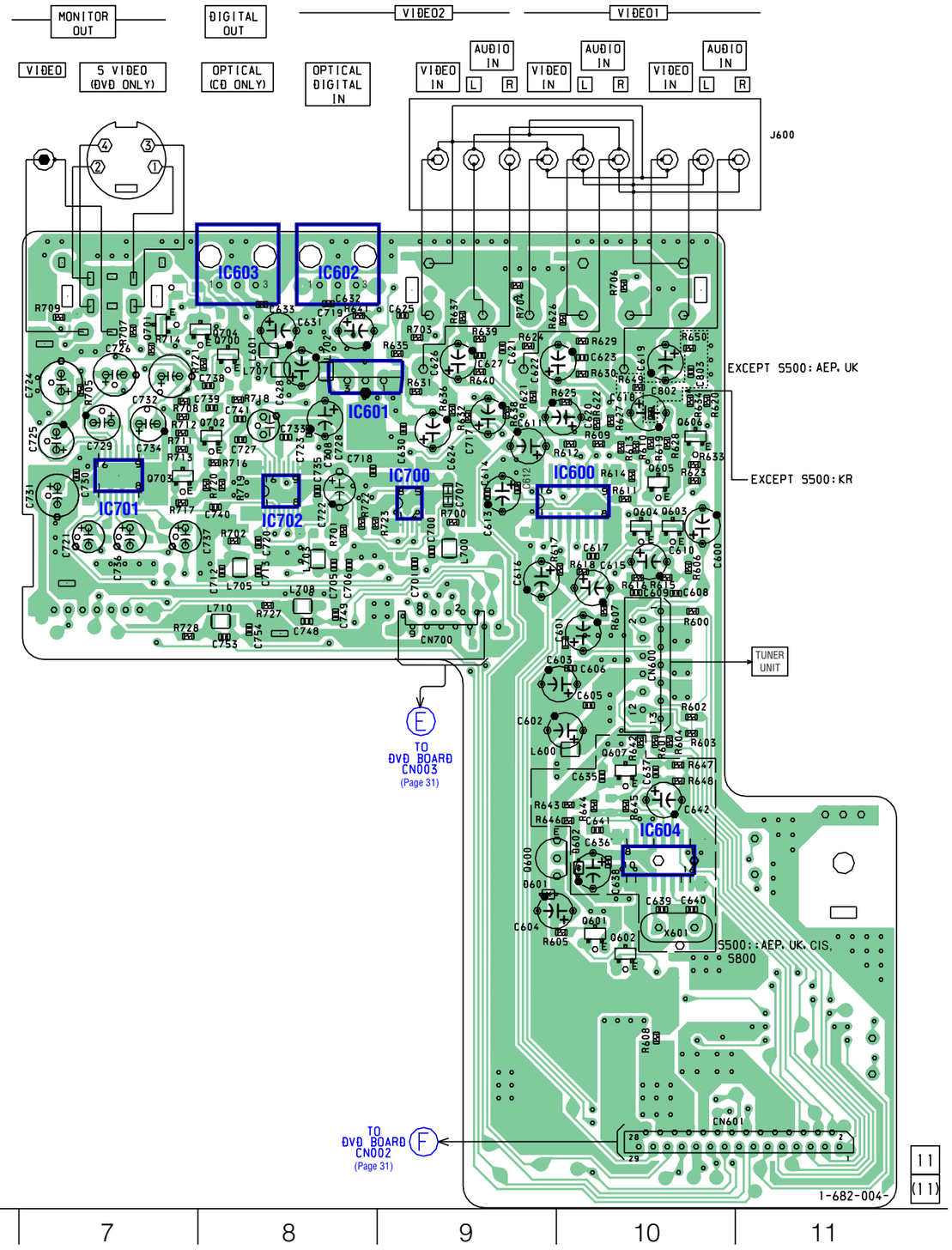

• **Semiconductor Location**

Ref. No.	Location	Ref. No.	Location	Ref. No.	Location
D601	D-9	IC701	B-7	Q605	B-10
D602	D-10	IC702	B-8	Q606	B-10
				Q607	D-10
IC600	B-10	Q600	D-9	Q700	A-8
IC601	A-8	Q601	E-10	Q701	A-7
IC602	A-8	Q602	E-10	Q702	B-8
IC603	A-8	Q603	B-10	Q703	B-7
IC604	D-10	Q604	B-10	Q704	A-8
IC700	B-9				

6-19. SCHEMATIC DIAGRAM – I/O SECTION (1/2) –

• See page 57 for IC Block Diagrams.

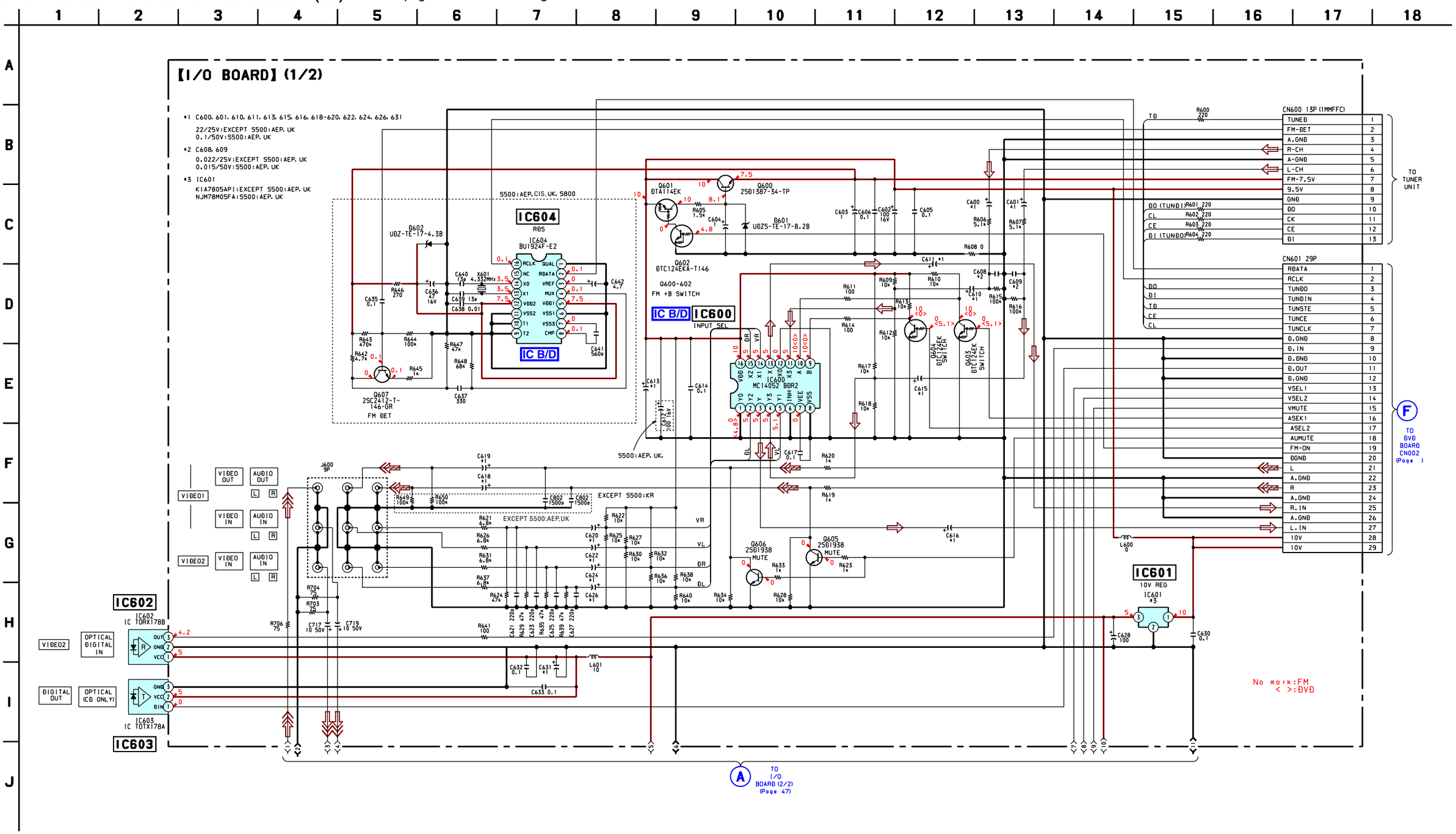

6-20. SCHEMATIC DIAGRAM – I/O SECTION (2/2) –

• See page 25 for Wavefoms.

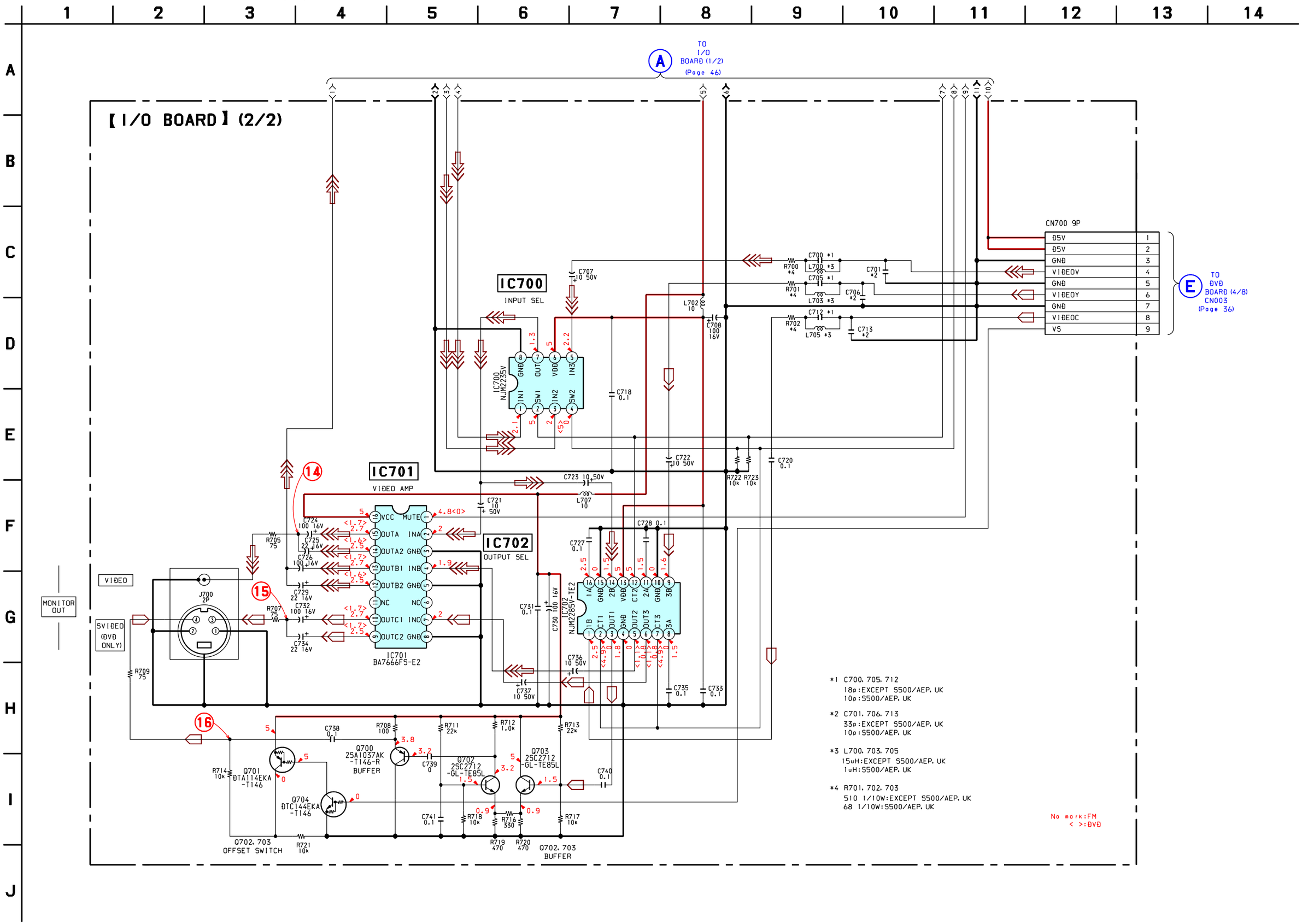

6-21. PRINTED WIRING BOARD – PANEL SECTION –

【FP-1030 BOARD】

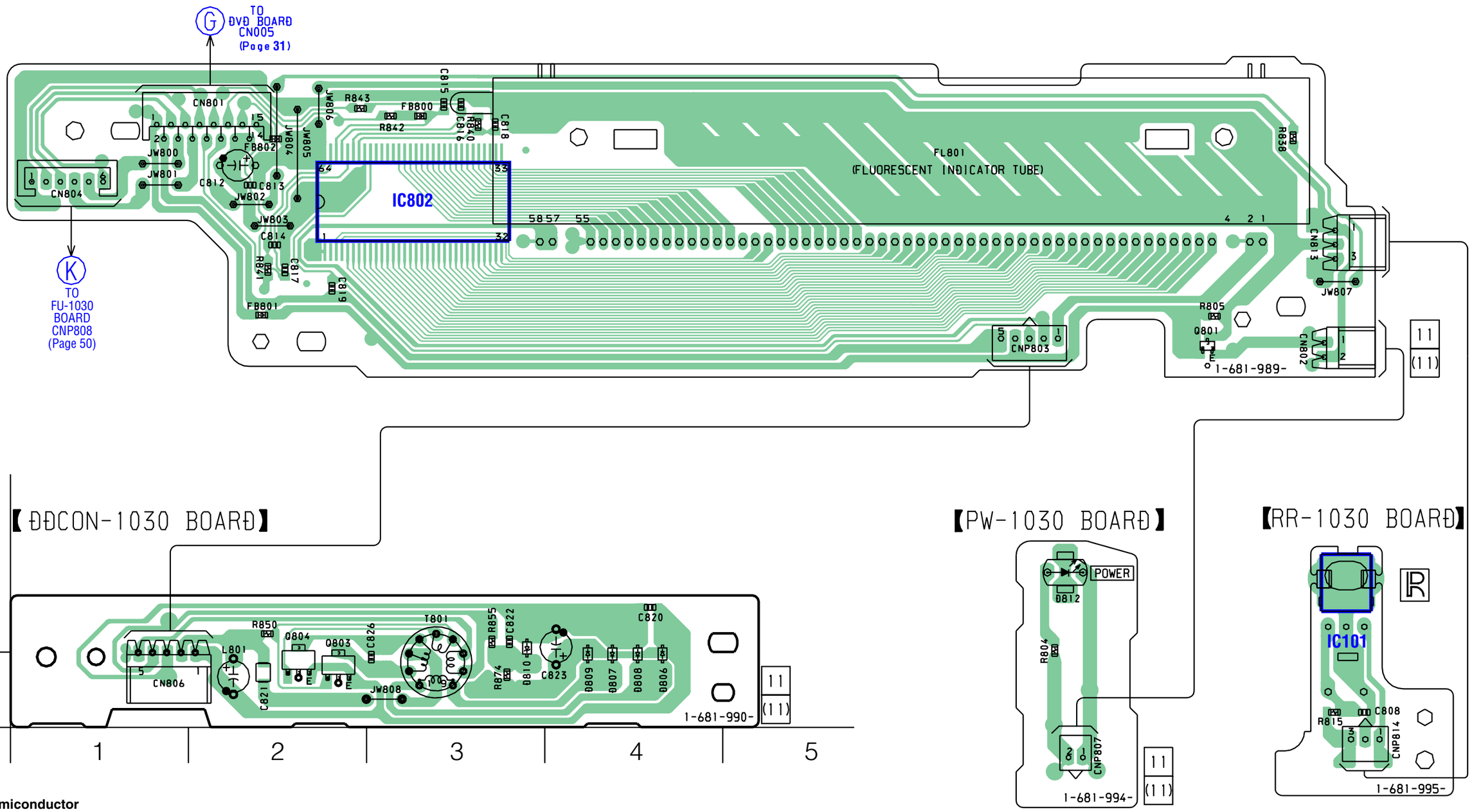

• **Semiconductor Location**

Ref. No.	Location
D806	B-4
D807	B-4
D808	B-4
D809	B-4
D810	B-3
Q803	B-2
Q804	B-2

6-22. SCHEMATIC DIAGRAM – PANEL SECTION –

• See page 57 for IC Block Diagrams.

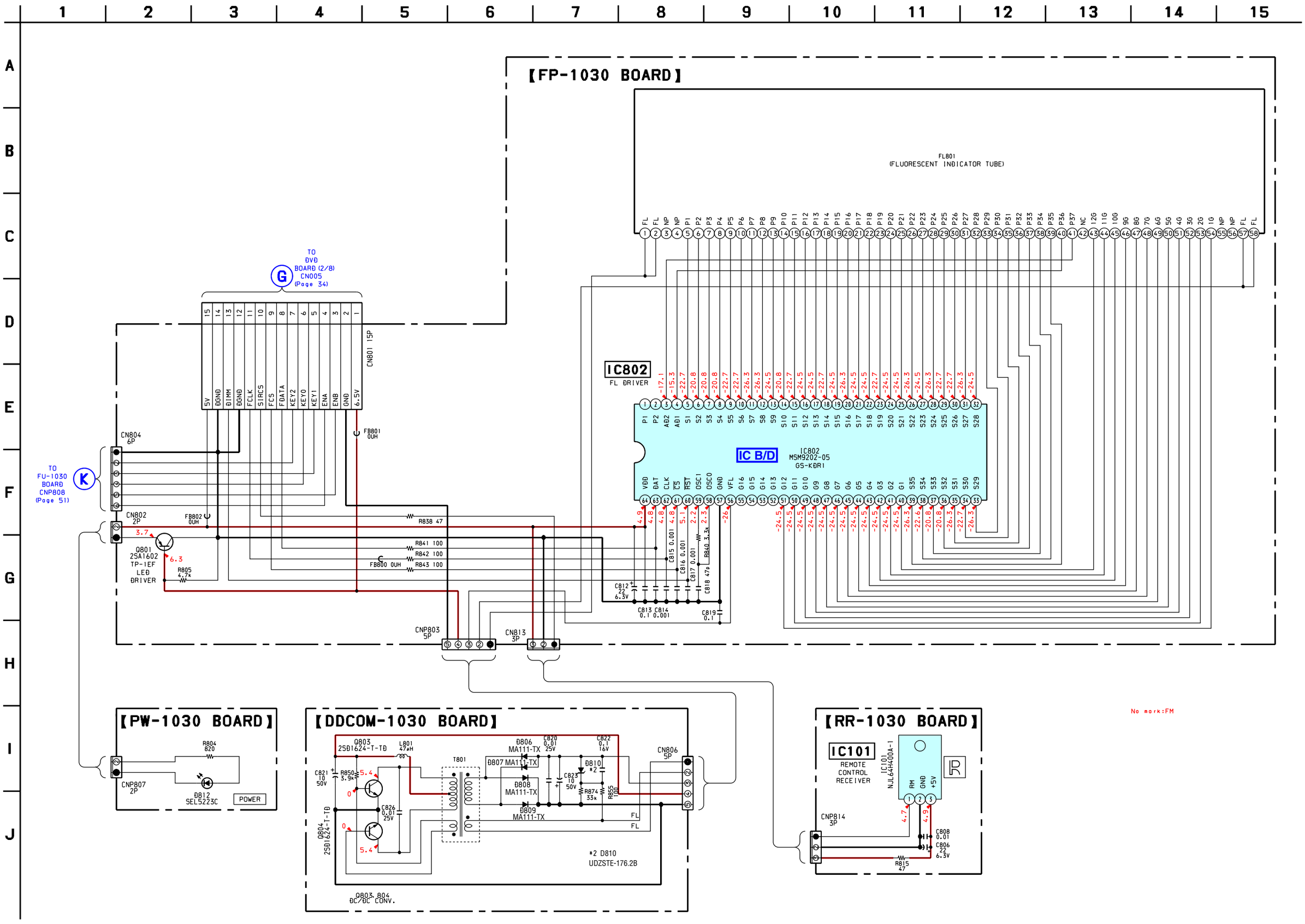

6-23. PRINTED WIRING BOARD – FRONT SECTION –

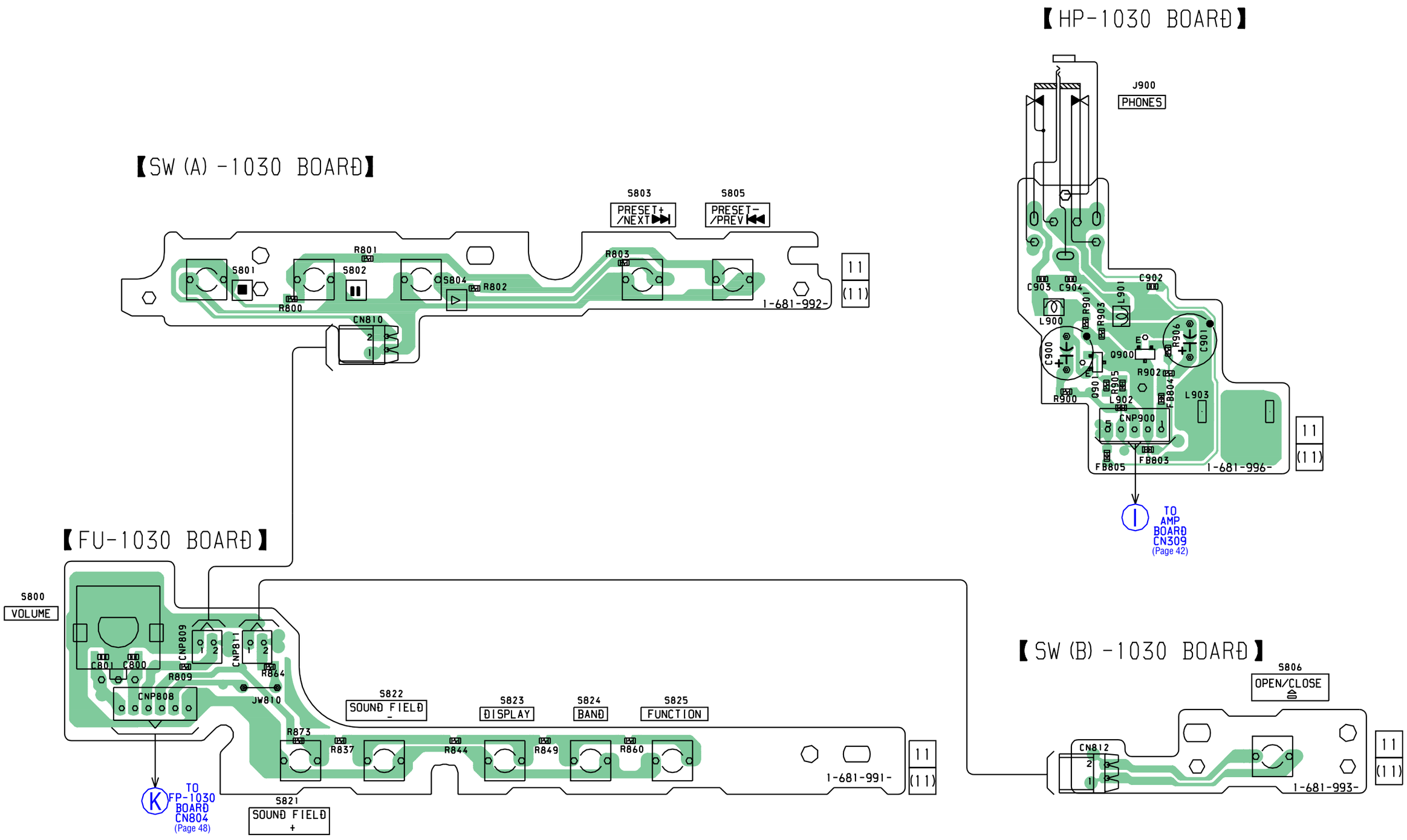

6-24. SCHEMATIC DIAGRAM – FRONT SECTION –

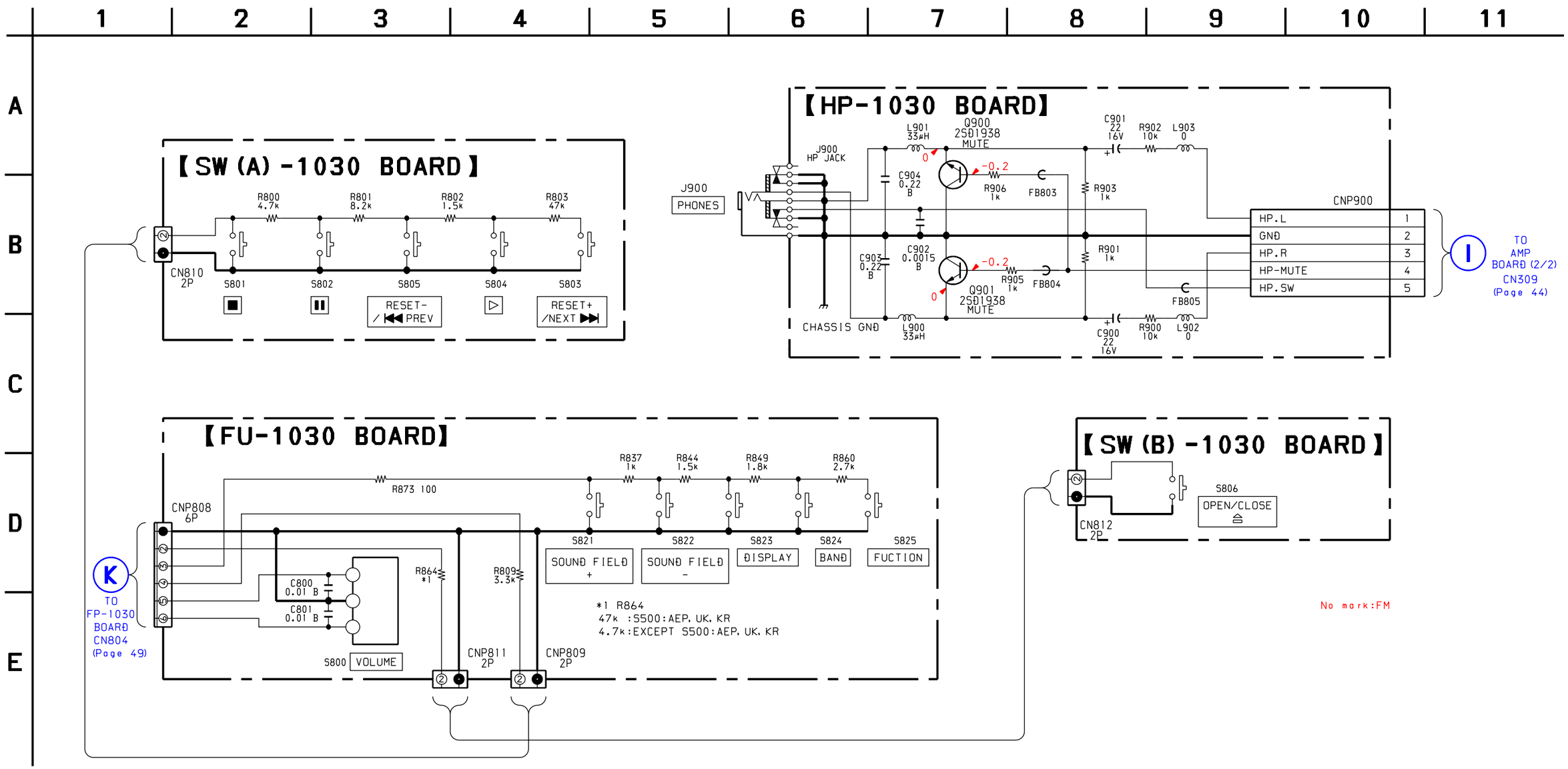

6-25. PRINTED WIRING BOARD – POWER SECTION (1/2)

【POWER BOARD】(SIDE A)

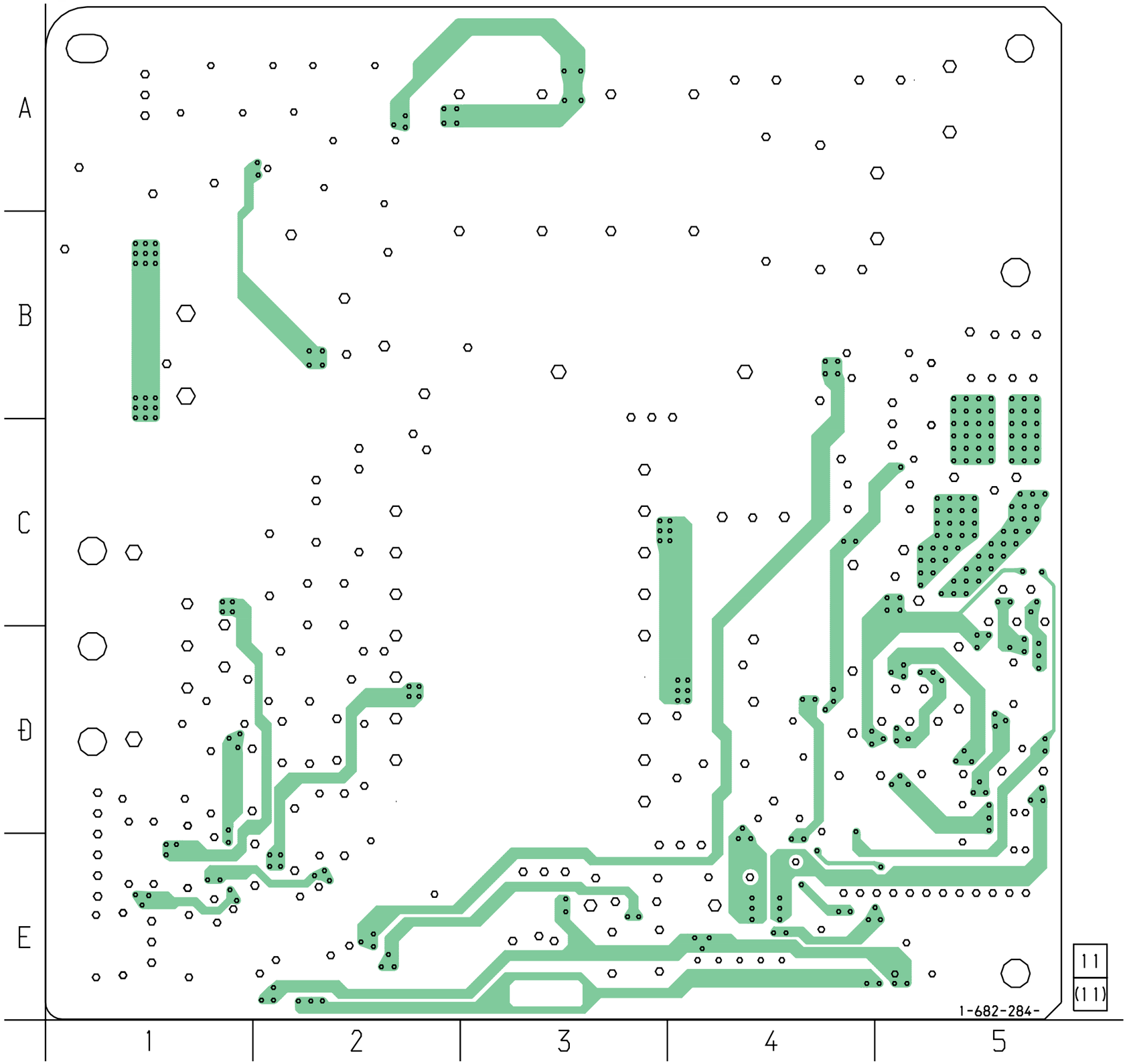

6-26. PRINTED WIRING BOARD – POWER SECTION (2/2) –

【POWER BOARD】(SIDE B)

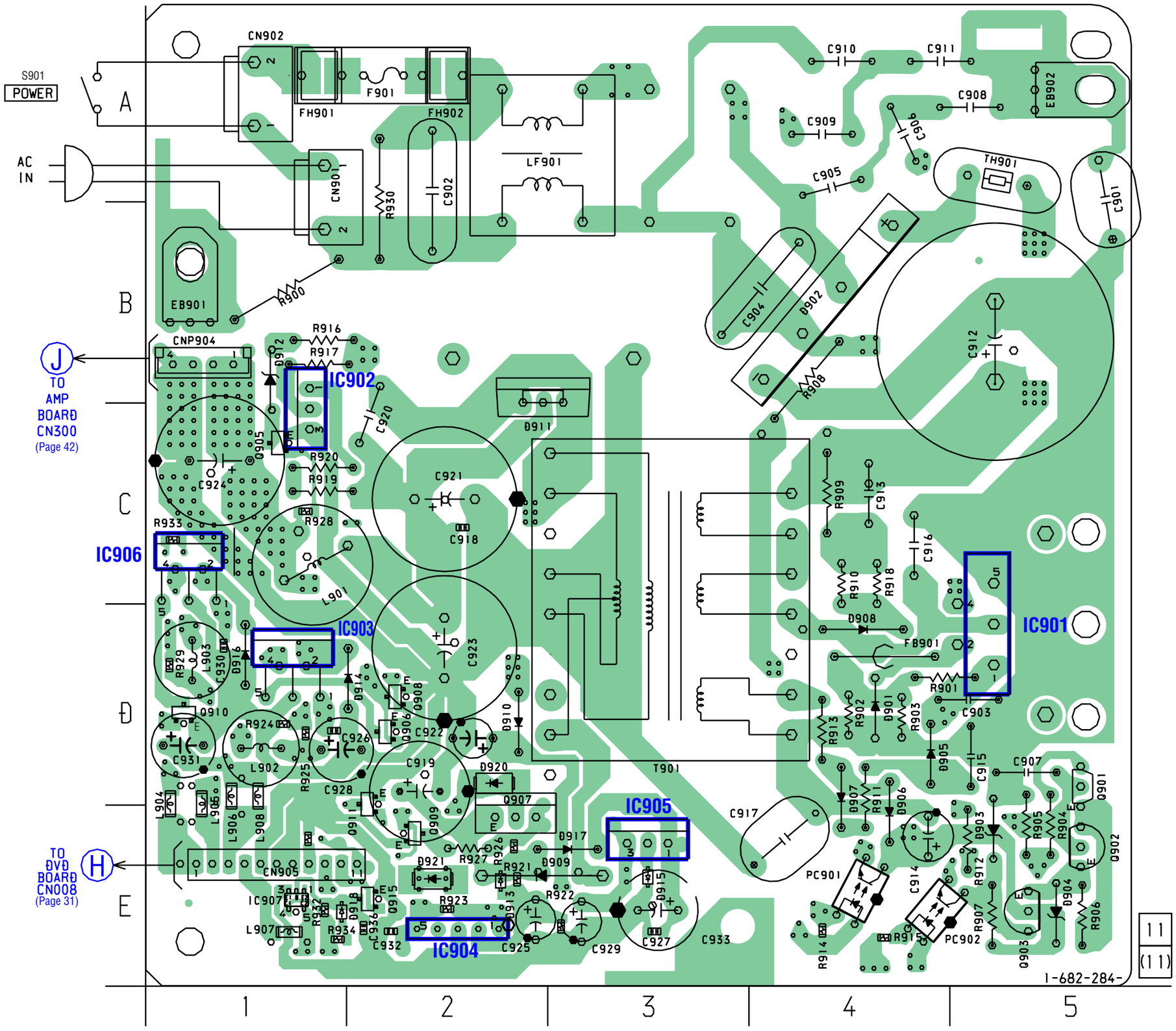

• Semiconductor Location

Ref. No.	Location
D901	D-4
D902	B-4
D903	E-5
D904	E-5
D905	D-4
D906	D-4
D907	D-4
D908	D-4
D909	E-2
D910	D-2
D911	B-2
D912	B-1
D913	E-2
D914	D-2
D915	E-3
D916	D-1
D917	E-3
D918	E-1
D920	D-2
D921	E-2
IC901	D-5
IC902	B-1
IC903	D-1
IC904	E-2
IC905	E-3
IC906	C-1
IC907	E-1
Q901	D-5
Q902	E-5
Q903	E-5
Q905	C-1
Q906	D-2
Q907	E-2
Q908	D-2
Q909	E-2
Q910	D-1
Q911	D-2
Q915	E-2

6-27. SCHEMATIC DIAGRAM – POWER SECTION –

• See page 59 for IC Block Diagrams.

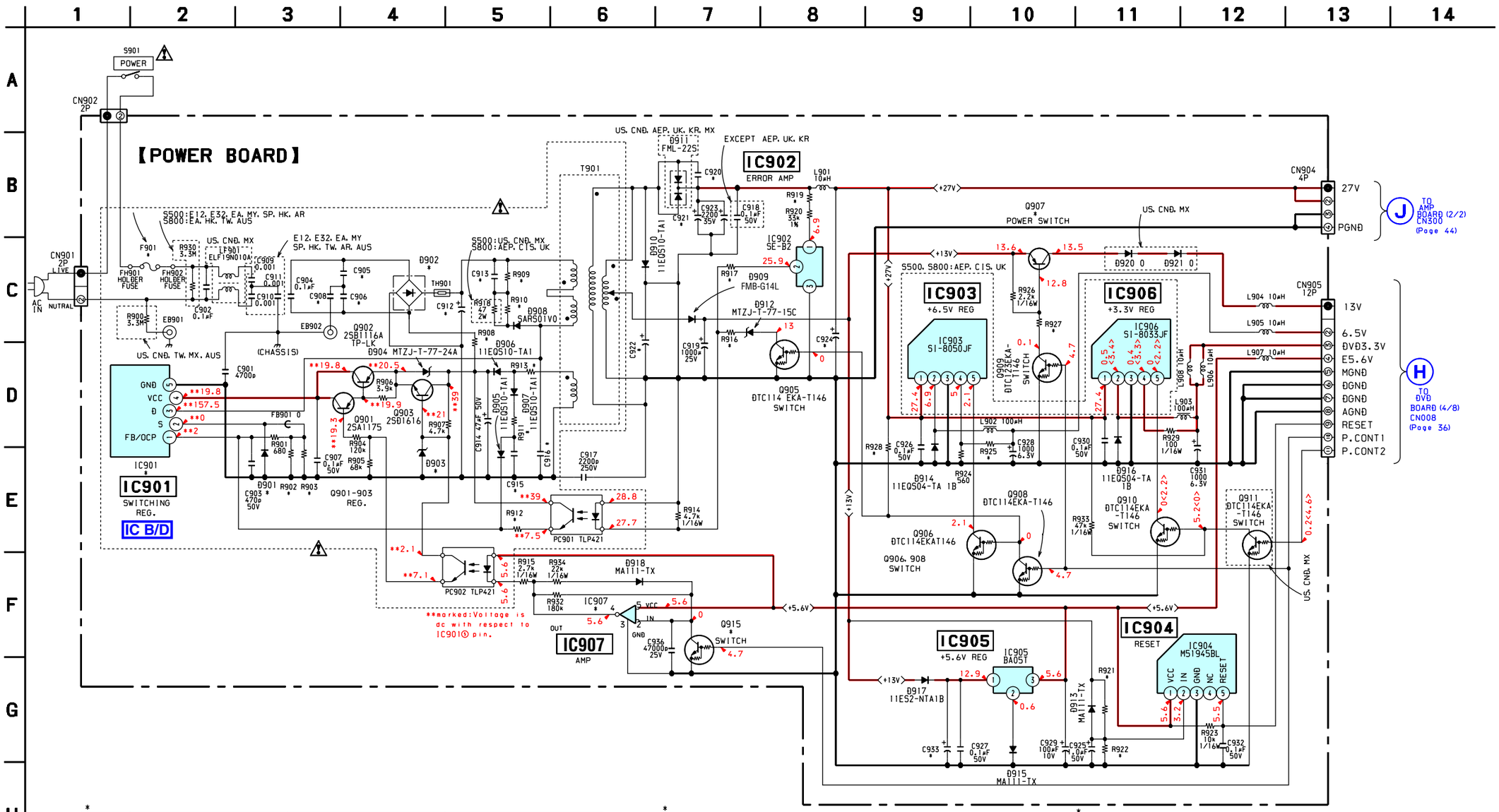

*

	AEP.CIS.UK.KR	US.CND.MX	E12.E32.EA.MY.SP.HK.TW.AR.AUS
C904	0.1/275V	0.1/250V	0.001/250V
	E12.E32.EA.MY.SP.TW.AR	US.CND.MX	AEP.CIS.UK.HK.KR.AUS
C908	0.001	0.0022	0.1
	US.CND.TW.MX.AUS	AEP.CIS.UK.KR	E12.E32.EA.MY.SP.HK.AR
C913	10000P/630V	0.001/1KV	1000P/630V
C915	220P	680P	470P
D902	RBV-604	RBV-606	RBV-406H-01
	US.CND.MX	AEP.CIS.UK.KR	E12.E32.EA.MY.SP.HK.AR.AUS
C916	4700/630V	1500/2KV	2200/800V
	US.CND.MX S800	AEP.CIS.UK.KR	E12.E32.EA.MY.SP.HK.TW.AR.AUS
C921.923	2200/35V	1800/25V	2200/50V
	US.CND.MX	TW.AUS	EXCEPT US.CND.TW.MX.AUS
R908	33K 1W	33K 2W	100K 2W
	S500:US.CND.AEP.UK.KR.MX S800:AEP.CIS.UK	S500:TW.AUS	S500:E12.E32.EA.MY.SP.HK. TW.AR.AUS
R919	10K	22K	39K
	US.CND.MX	AEP.CIS.UK.KR	E12.E32.EA.MY.SP.HK.TW.AR.AUS
R921	470K	330K	1M
R922	68K	82K	47K
R925	150	180	1.5K
	S500:US.CND.MX S800:AEP.CIS.UK	S500:AEP.UK.E12.E32.EA.MY.SP. HK.TW.KR.AR.AUS	S800:EA.HK.TW.AUS
R928	47K	22K	10K

*

	US.CND.MX	EXCEPT US.CND.MX
C905.906	0.0022	0.001
	US.CND.TW.MX.	EXCEPT US.CND.TW.MX
C912	*820/200V*	*390/450V*
C922	22/100V	22/50V
	US.CND.TW.MX.AUS	EXCEPT US.CND.TW.MX.AUS
C920	10000P	4700P
	US.CND.AEP.UK.KR.MX	E12.E32.EA.MY.SP.HK.TW.AR.AUS
C924	2200/35V	1000/50V
	S500:US.CND.MX	EXCEPT US.CND.MX
C933	2200/16V	1000/16V
D903	MTZJ-T-77-22A	MTZJ-77-18C
F901	5A/125V	3.15A/250V
	AEP.CIS.UK.KR	EXCEPT AEP.CIS.UK.KR
D901	1SS133T-72	1SS133T-77
	US.CND.MX	AEP.CIS.UK.KR
IC901	STR-F6426S	STR-F6676
	US.CND.AEP.UK.KR.MX S800	E12.E32.EA.MY.SP.HK.TW.AR.AUS
IC907	TC45584F (TE85R)	TC7514FU (TE85R)
	AEP.CIS.UK.KR	EXCEPT AEP.CIS.UK.KR
L902.903	150uH	100uH
	US.CND.AEP.CIS.UK.KR.MX	E12.E32.EA.MY.SP.HK.TW.AR.AUS
Q907	2SB1640 (TP)	2SB1375
	TW.AUS	EXCEPT TW.AUS
Q915	DTA114EKA-T146	DTC114EKA-T146
	S500:US.CND.TW.MX.AUS	AEP.CIS.UK
R902	0.1	0.22
R903	0.1	0.22

*

	US.CND.AEP.CIS.UK.KR.MX	EXCEPT US.CND.AEP.CIS.UK.KR.MX
R909	220K 1/4W	220K 1/2W
	US.CND.TW.MX.AUS	E12.E32.EA.MY.SP.HK.AR
R910	47 2W	47 3W
	US.CND.AEP.CIS.UK.TW.KR.MX.AUS	EXCEPT US.CND.AEP.CIS.UK.TW.KR. MX.AUS
R911	4.7K	5.6K
R912	5.6K	8.2K
R920	22K	6.8K
	US.CND.AEP.CIS.UK.KR.MX	EXCEPT US.CND.AEP.CIS.UK.KR.MX
R913	33 1/4W	2.2 1/6W
R916	2.2K	1.8K
	US.CND.MX	EXCEPT US.CND.MX
R917	1.8K	2.7K
	US.CND.MX	E12.E32.EA.MY.SP.HK.TW.AR.AUS
R927	220 1W	1K 1/4W
	S500:US.CND.MX S800:AEP.CIS.UK	EXCEPT S500:US.CND.MX S800:AEP.CIS.UK
R928	47K	22K
R932	180K	150K
	US.CND.AEP.CIS.UK.KR.MX	EXCEPT US.CND.AEP.CIS.UK.KR.MX
R934	22K	18K
	US.CND.MX	EXCEPT US.CND.MX
T901	1-437-414-11	1-437-415-11

6-28. SCHEMATIC DIAGRAM – LOADING SECTION –

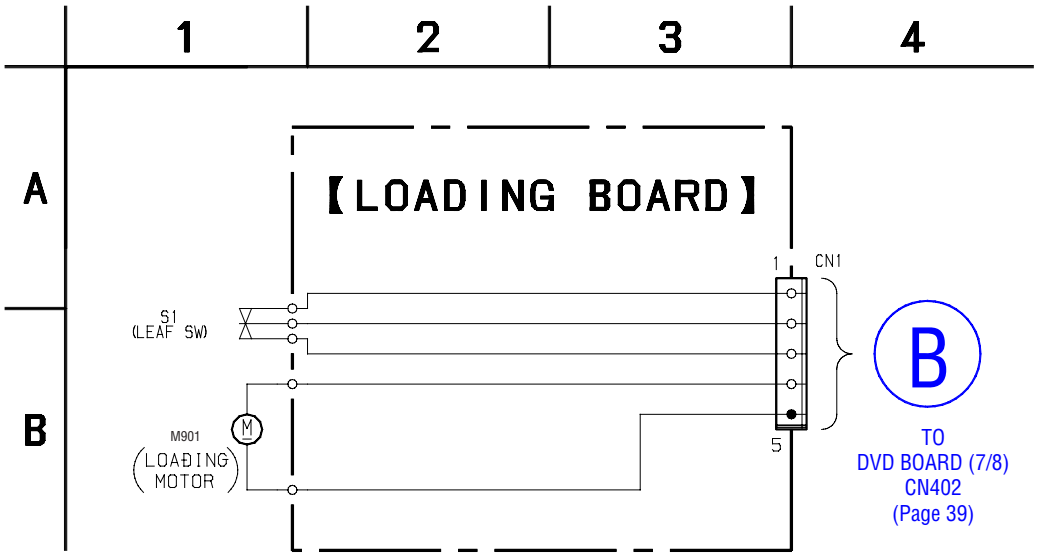

6-29. PRINTED WIRING BOARD – LOADING SECTION –

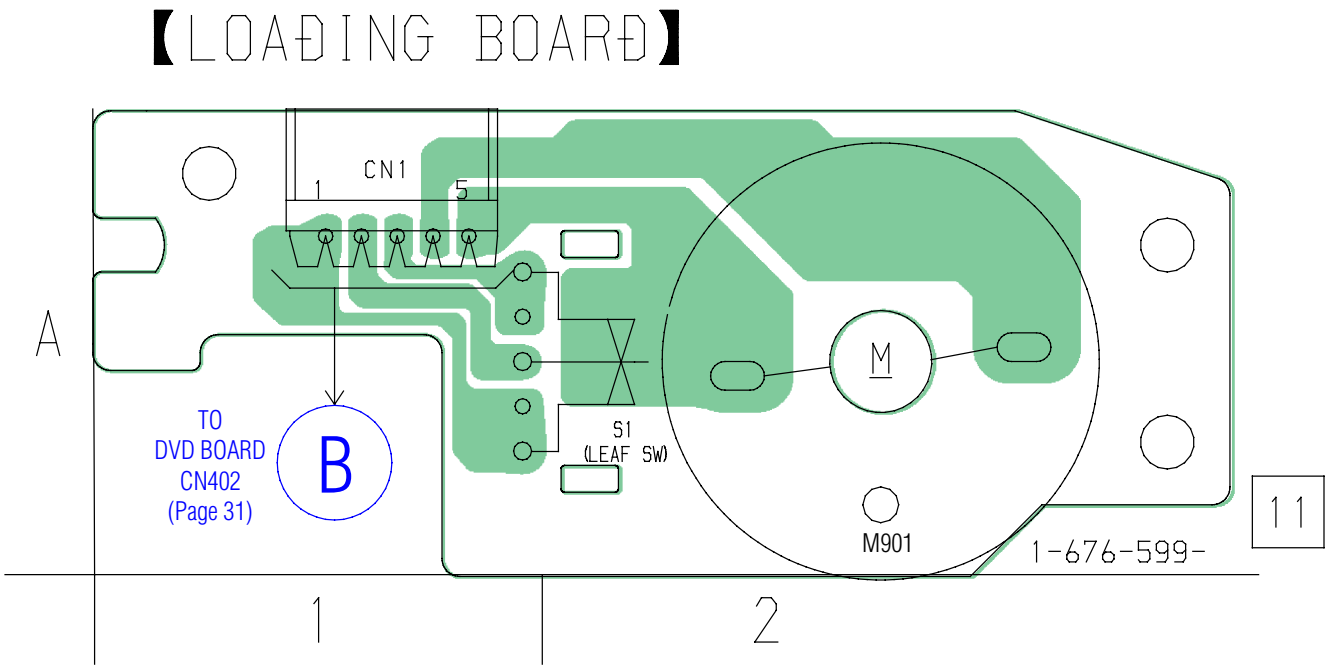

6-30. IC BLOCK DIAGRAMS

IC102 IMIC6001BT-D (DVD BOARD)

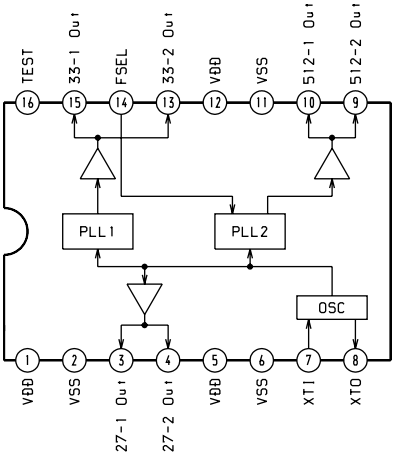

IC606 LC89056W (DVD BOARD)

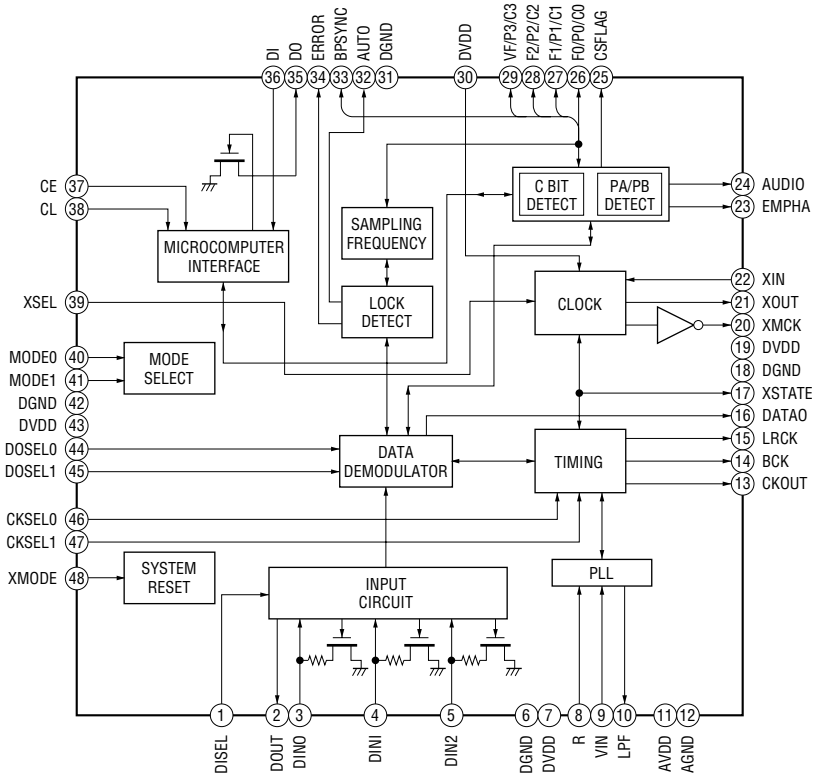

IC608 PCM1748 (DVD BOARD)

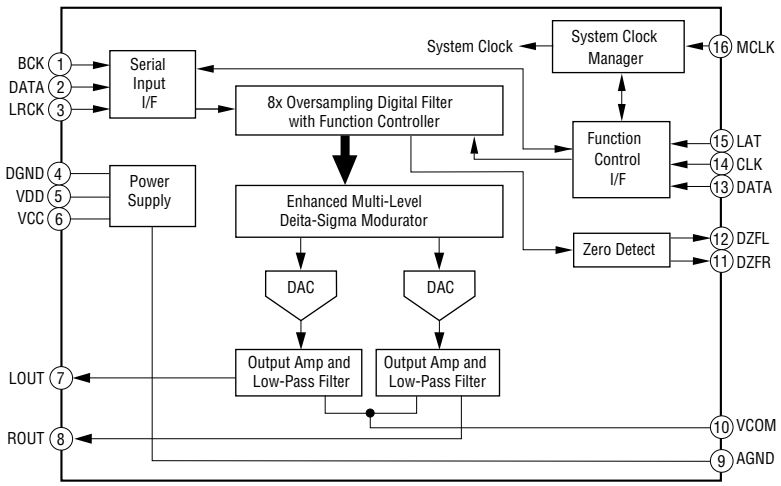

IC802 MSM9202-05GS-KDR1 (FP-1030 BOARD)

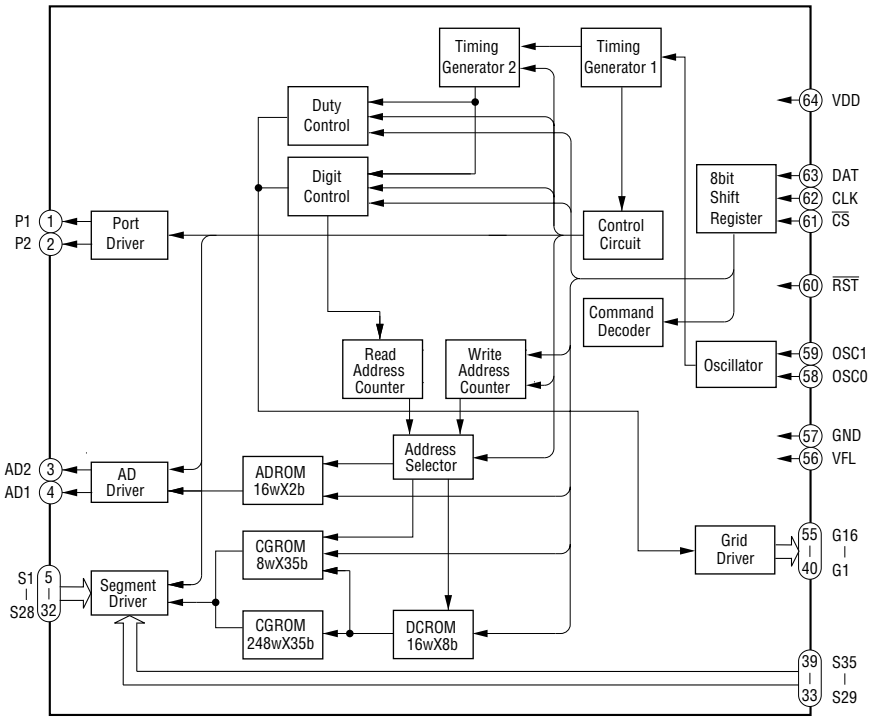

IC600 MC14052BDR2 (I/O BOARD)

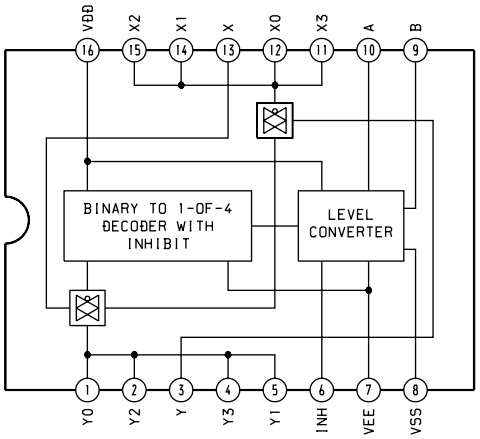

IC604 BU1924F-E2 (I/O BOARD)

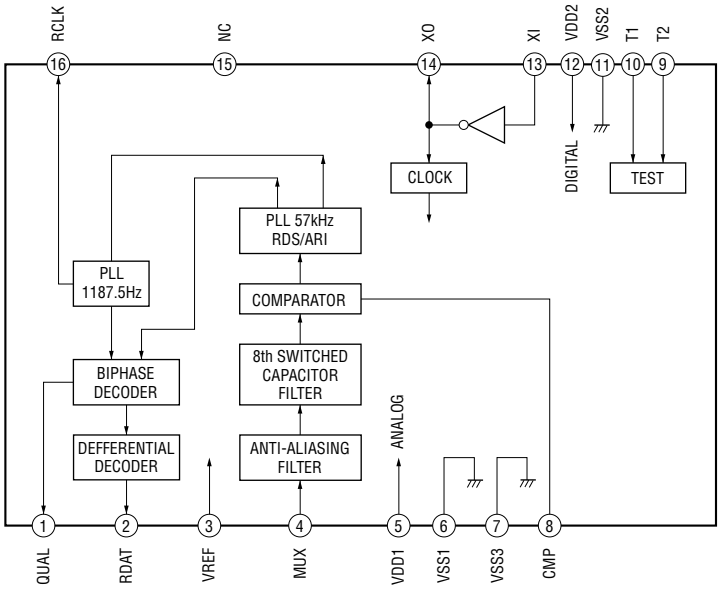

IC001 SP3728AC (RF-240 BOARD)

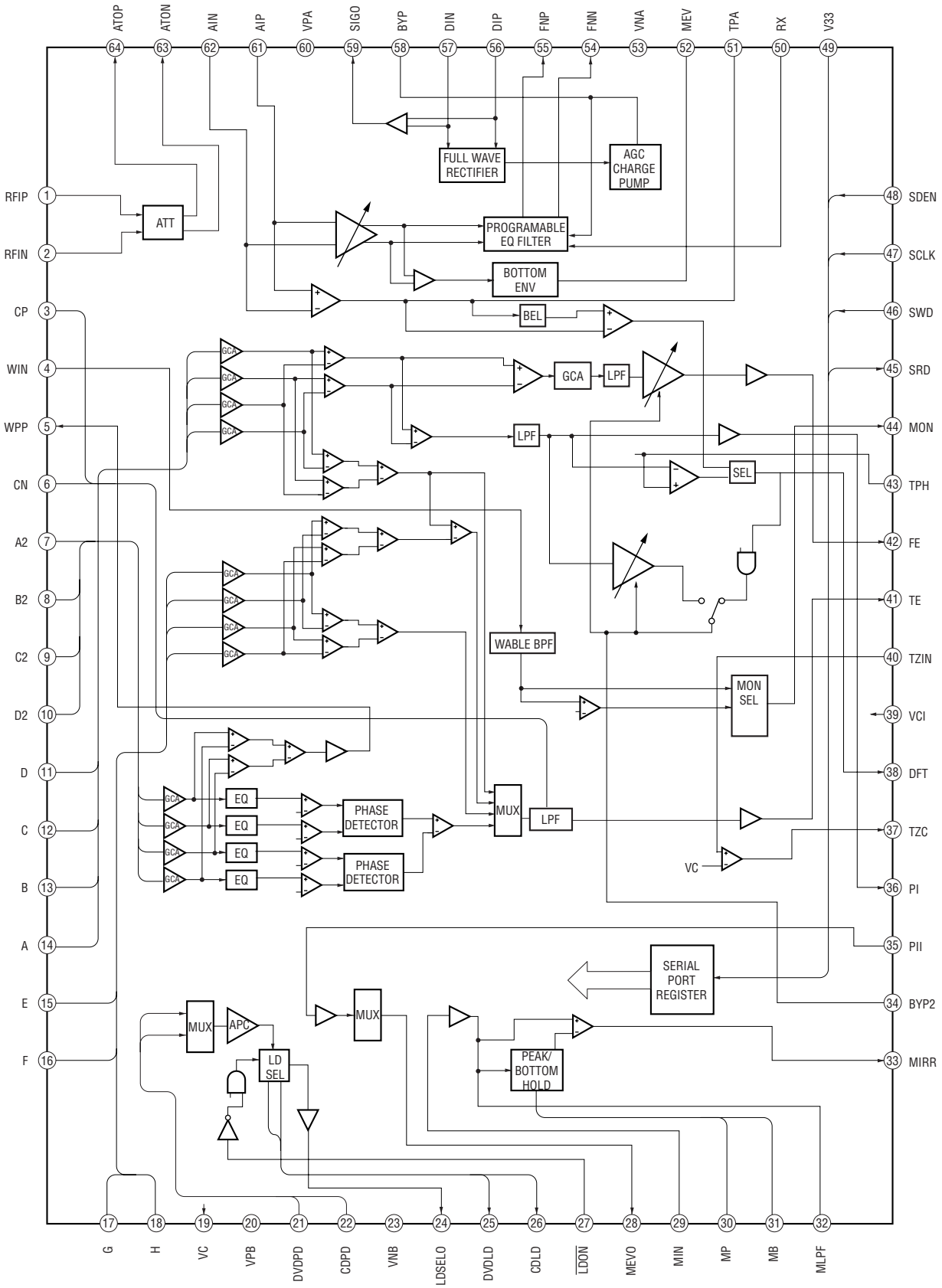

IC901 STR-F6676 (POWER BOARD)
(S500 : US, CND, MX)

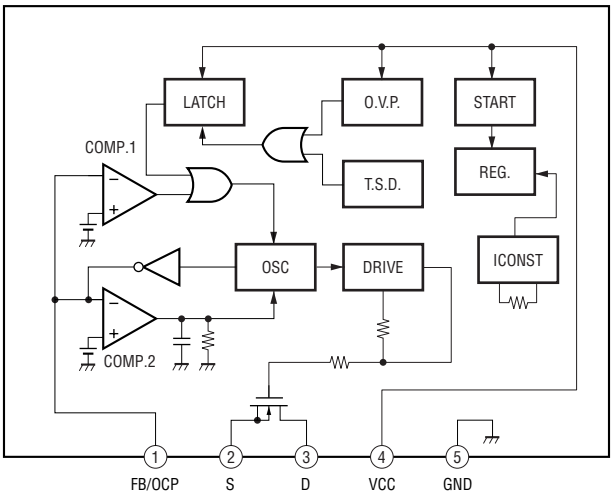

IC901 STR-F6426S (POWER BOARD)
(S500 : AEP, UK, KR, S800 : AEP, CIS, UK)

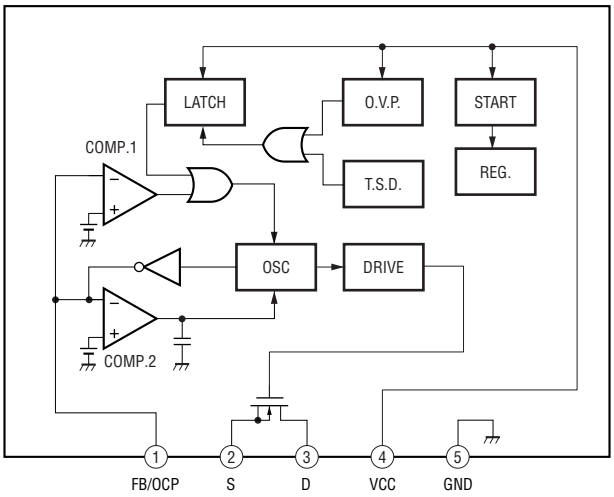

6-31. IC PIN FUNCTION DESCRIPTION

• IC103 MB91307APFV-G-BND-E1 (SYSTEM CONTROL) (DVD BOARD)

Pin No.	Pin Name	I/O	Description
1 to 5	HA17 - 21	O	Address signal output
6	HA22	O	Address signal output (not used)
7	WP	O	I2C EEPROM write protect signal output
8	TRM/XKRCS	O	Chip select signal output to IC801(CXD2752R)
9	AVCC	–	Analog power supply
10	AVRH	–	A/D converter reference voltage supply
11	AVSS	–	Analog ground
12	AN0	I	Region setting input
13	AN1	I	Model setting input
14	AN2	I	Destination setting input
15	AN3	I	Not used (pull-up)
16	INT0	I	Interrupt signal input from IC503(AV Decoder)
17	INT1	I	Interrupt signal input from IC302(CXD9635R/ARP)
18	INT2	I	Interrupt signal input from IC302(CXD9635R/SDSP)
19	INT3	I	FGA interrupt signal input
20	INT4	I	Interrupt signal input from IC901(CPU)
21	INT5	I	Interrupt signal input from IC801(CXD2752R)
22	INT6	O	Soft mute control signal output to IC801(CXD2752R)
23	INT7	–	Not used
24	VCC	–	Power supply
25	SI0	I	Serial data input from IC901(CPU)
26	SO0	O	Serial data output to IC901(CPU)
27	SC0	O	Serial clock output to IC901(CPU)
28	SI1	I	Serial data input from IC801(CXD2752R)
29	SO1	O	Serial data output to IC801(CXD2752R)
30	SC1	O	Serial clock output to IC801(CXD2752R)
31	SI2	I	RS-232C data input for debugging
32	SO2	O	RS-232C data output for debugging
33	SC2	O	RS-232C clock input or output for debugging
34	VSS	–	Ground
35	XRST	O	System reset signal output
36	XARPRST	O	Reset signal output to IC302(CXD9635R/ARP)
37	RGBSEL/MICMUTE	–	Not used
38	SDA	I/O	I2C data input or output
39	SCL	O	I2C clock output
40	TRM+/XKRRST	O	Data request selection signal output (DVD : L, SACD : H)
41	EUROV/Y/CLPSW1	–	Not used
42	DISCEXT/CLPSW0	–	Not used
43	MD0	–	Operation mode setting (connected to Vcc)
44	MD1	–	Operation mode setting (connected to Ground)
45	MD2	–	Operation mode setting (connected to Ground)
46	DREQ0	I	DMA-REQ1 signal input
47	DACK0	O	DMA-ACK1 signal output
48	XDRVMUTE	O	Drive mute control signal output to IC401
49	DREQ1	I	DMA-REQ0 signal input
50	DACK1	O	DMA-ACK0 signal output
51	XIFCS	O	Chip select signal output to IC901(CPU)
52	VSS	–	Ground
53	X1	–	Clock (oscillator) output
54	X0	–	Clock (oscillator) input

Pin No.	Pin Name	I/O	Description
55	VCC	–	Power supply
56	CKSW1	I	Chucking switch (Tray SW1) signal input
57	OCSW1	I	Open/Close switch (Tray SW2) signal input
58	CS0X	O	Chip select signal output to external ROM
59	CS1X	–	Not used
60	CS2X	O	Chip select signal output to AVD SDRAM
61	CS3X	O	Chip select signal output to AVD R-BUS
62	CS4X	O	Chip select signal output to IC302(CXD8635R/ARP)
63	CS5X	O	Chip select signal output to IC302(CXD8635R/SDSP)
64	C	–	Terminal for built-in regulator bypass capacitor
65	CS6X	O	FGA CS output
66	CS7X	–	Not used
67	XWAIT	I	external WAIT signal input
68	BGRNTX	I	External bus open aclnowledge signal input (pull-up)
69	BRQ	I	External bus open request signal input
70	XRD	O	External bus read enable signal output
71	XWRH	O	Write signal output for upper byte
72	XWRL	O	Write signal output for lower byte
73	XMIX	–	Not used
74	HSTX	–	Not used (pull-up)
75	VSS	–	Ground
76	XFRRST	I	Reset signal input
77	CPUCK	O	CPU clock output
78	OCSW2	I	Tray switch signal input
79	XDACK	–	Not used (pull-up)
80	VESCS/X39CS	–	Not used (pull-up)
81	48/44.1K	O	PLL IC control signal output
82	WIDE	O	Video wide offset control signal output
83	MAMUTE	I	IFOK signal input from IC901(CPU)
84	XLDON	O	Laser diode mute control signal output
85 to 100	HD0 -15	I/O	External data bus bits 0 - 15
101	VSS	–	Ground
102 to 109	HA0 - 7	O	Address signal output
110	VCC	–	Power supply
111 to 118	HA8 - 15	O	Address signal output
119	VSS	–	Ground
120	HA16	O	Address signal output

• **IC302 CXD9635R (SERVO DSP) (DVD BOARD)**

Pin No.	Pin Name	I/O	Description
1	VSS	–	Digital Ground
2	D0	I/O	CPU data
3	D1	I/O	
4	D2	I/O	
5	D3	I/O	
6	D4	I/O	
7	D5	I/O	
8	D6	I/O	
9	D7	I/O	
10	VDD 3.3V	–	Digital power supply 3.3V
11	A0	I	CPU address
12	A1	I	
13	A2	I	
14	A3	I	
15	A4	I	
16	VDD	–	Digital Ground
17	A5	I	CPU address
18	A6	I	
19	A7	I	
20	VDD 1.8V	–	Digital power supply 1.8V
21	XINT	O	Interrupt
22	HINT	O	Host interrupt(DSP)
23	XCS	I	Tip select
24	HCS	I	Host servo tip select
25	XWAT	O	Wait
26	VSS	–	Digital Ground
27	MA0	O	DRAM address
28	MA1	O	
29	MA2	O	
30	MA3	O	
31	MA4	O	
32	MA5	O	
33	MA6	O	
34	MA7	O	
35	MA8	O	
36	MA9	O	
37	VDD 3.3V	–	Digital power supply 3.3V
38	XMWR	O	DRAM write enable
39	XCAS	O	DRAM CAS
40	VSS	–	Digital Ground
41	XRAS	O	DRAM RAS
42	XOE	O	DRAM output enable
43	VDD1 1.8V	–	Digital power supply 1.8V
44	MD0	I/O	DRAM data
45	MD1	I/O	
46	MD2	I/O	
47	MD3	I/O	
48	MD4	I/O	
49	MD5	I/O	
50	MD6	I/O	

Pin No.	Pin Name	I/O	Description
51	MD7	I/O	DRAM data
52	VSS	–	Digital Ground
53	MD8	I/O	DRAM data
54	MD9	I/O	
55	MD10	I/O	
56	MD11	I/O	
57	MD12	I/O	
58	MD13	I/O	
59	MD14	I/O	
60	MD15	I/O	
61	VDD 3.3V	–	Digital power supply 3.3V
62	DATA	O	CDDA data
63	BCLK	O	CDDA bit clock
64	VSS	–	Digital Ground
65	LRCK	O	CDDA LR clock
66	DOUT	O	Digital out
67	VDD 1.8V	–	Digital power supply 1.8V
68	SDCK	O	SD bus clock
69	XSHD	O	SD bus header
70	XSRQ	I/O	SD bus REQ
71	XSAK	O	SD bus ACK
72	SDEF	O	SD bus error flag
73	SD0	I/O	SD bus data
74	SD1	I/O	
75	SD2	I/O	
76	SD3	I/O	
77	VSS	–	Digital Ground
78	SD4	I/O	SD bus data
79	SD5	I/O	
80	SD6	I/O	
81	SD7	I/O	
82	VDD 3.3V	–	Digital power supply 3.3V
83	MNT0	I/O	Monitor bus
84	MNT1	I/O	
85	MNT2	I/O	
86	MNT3	I/O	
87	MNT4	I/O	
88	MNT5	I/O	
89	MNT6	I/O	
90	MNT7	I/O	
91	ESTB	O	Error storbe
92	VDD 1.8V	–	Digital power supply 1.8V
93	RFD	I/O	RF digital data in/out
94	VSS	–	Digital Ground
95	PLCKO	O	PLCK output
96	ADO0	O	ADC output
97	ADO1	O	
98	ADO2	O	
99	ADO3	O	
100	ADO4	O	

Pin No.	Pin Name	I/O	Description
101	ADO5	O	ADC output
102	ADO6	O	
103	ADO7	O	
104	VSS	–	Digital Ground
105	VSSA4	–	Analog Ground
106	VCO	I	VCO control input
107	R1	I	VCO outside resistance 1
108	R2	I	VCO outside resistance 2
109	VDDA4 3.3V	–	Analog power supply
110	VSSA3	–	Analog Ground
111	INP	I	OP amp positive input
112	INM	I	OP amp negative input
113	FR3	I	Feedback resistance 3
114	FR2	I	Feedback resistance 2
115	FR1	I	Feedback resistance 1
116	Y	O	OP amp output
117	VDDA3 3.3V	–	Analog power supply
118	VREF	I	DAC reference voltage
119	BIAS	I	DAC bias pin
120	VDDA2 3.3V	–	Analog power supply
121	VSSA2	–	Analog Ground
122	AOUT	O	DAC output
123	IREF	I	Reference current of DAC
124	VSSD2	–	Digital Ground(DAC)
125	VDDD2 3.3V	–	Digital power supply(DAC)
126	VRT	I	ADC reference
127	VDDA1 3.3V	–	Analog power supply
128	RFIN1	I	RF input
129	AIN	I	RF input
130	VSSA1	–	Analog Ground
131	RFIN1	I	RF input
132	VRB	I	ADC reference
133	VSSD1	–	Digital Ground(ADC)
134	VDDD1 3.3V	–	Digital power supply(ADC)
135	ADC0	I	ADC input
136	ADC1	I	
137	ADC2	I	
138	VDDA0 3.3V	–	ASW analog power supply
139	ADC3	I	ADC input
140	ADC4	I	
141	VSSA0	–	ASW analog ground
142	ADC5	I	ADC input
143	ADC6	I	
144	ADC7	I	
145	VDDD0 3.3V	–	ADC digital power supply(DSP)
146	VSSD0	–	ADC digital ground DSP
147	VRBA	I	ADC reference
148	VSSA0	–	Analog ground(ADC)
149	TESTAA	O	ASW output
150	VDDA0 3.3V	–	ADC analog power supply(DSP)

Pin No.	Pin Name	I/O	Description
151	VRTA	I	ADC reference
152	VSS	–	Digital Ground
153	TESTK0	I	Test terminal L
154	TESTK1	I	
155	TESTK2	I	
156	XDSPRST	I	DSP reset
157	XARPRST	I	Reset
158	VSS	–	Digital Ground
159	MDS0	O	CLV speed error
160	MON	O	Motor on
161	MDP0	O	CLV phase error
162	DFCT	I/O	Defect detection output
163	JITPWM	O	Jitter PWM output
164	LOCK	O	EFM lock detection
165	VDD1 1.8V	–	Digital power supply 1.8V
166	GIO0/INT2	I/O	GIO/external interruption
167	GIO1/INT3	I/O	
168	GIO2/INT4	I/O	
169	GIO3/INT5	I/O	
170	VDD 3.3V	–	Digital power supply 3.3V
171	GIO4/PGREF	I/O	GIO/PGREF input
172	GIO5/PGIN	I/O	GIO/PGIN input
173	GIO6/SDI	I/O	GIO/serial data in
174	GIO7/SDO	I/O	GIO/serial data out
175	GIO8/SCK	I/O	GIO/serial clock
176	GIO9/FGREF	I/O	GIO/FGREF input
177	GIO10/FGIN	I/O	GIO/FGIN input
178	GIO11/TMC2	I/O	GIO/Timer 2 clock input
179	GIO12	I/O	GIO(input and output)
180	GIO13	I/O	
181	VSS	–	Digital Ground
182	CLKIN	I	Clock input
183	VSSA5	–	Analog Ground
184	VDDA5 1.8V	–	Analog power supply
185	DFCTI	I	Defect input
186	VSS	–	Digital Ground
187	MCKI	I	Clock for ECC 33MHz
188	VDD 1.8V	–	Digital power supply 1.8V
189	SCKI	I	System clock
190	VSS	–	Digital Ground
191	TRST	I	JTAG Boundary scan
192	TMS	I	
193	TDI	I	
194	TCK	I	
195	TDO	O	
196	TZC	I	TZC input
197	MIRR	I	MIRR input
198	PWM0	O	PWM output
199	PWM1	O	
200	PWM2	O	

Pin No.	Pin Name	I/O	Description
201	VDD 3.3V	–	Digital power supply 3.3V
202	PDM0	O	PDM output
203	PDM1	O	
204	PDM2	O	
205	PDM3	O	
206	VSS	–	Digital Ground
207	XWR	I	CPU light
208	XRD	I	CPU lead

• IC801 CXD2752R (PLAYBACK SIGNAL PROCESSOR) (DVD BOARD)

Pin No.	Pin Name	I/O	Description
1	VSCA0	–	Ground
2	XMSLAT	I	Latch signal input for micom serial communication
3	MSCK	I	Shift clock input for micom serial communication
4	MSDATI	I	Data input for micom serial communication
5	VDCA0	–	Power supply
6	MSDATO	O	Data output for micom serial communication
7	MSREADY	O	Output ready flag output for micom serial communication
8	XMSDOE	O	Output enable signal output for micom serial communication
9	XRST	I	Reset signal input
10	SMUTE	I	Soft mute signal input (H:soft mute, L:off)
11	MCKI	I	Master clock input (768Fs 33.8688MHz)
12	VSIOA0	–	Ground for I/O
13	EXCKO1	O	External clock output 1
14	EXCKO2	O	External clock output 2 (not used)
15	LRCK	O	Clock output (1Fs 44.1kHz)(not used)
16	F75HZ	O	Frame signal output
17	VDIOA0	–	Power supply for I/O
18 to 25	MNT0 - 7	O	Monitor signal output (not used)
26	TCK	I	Test clock input (connected to ground)
27	TDI	I	Input terminal for test
28	VSCA1	–	Ground
29	TDO	O	Output terminal for test (open)
30	TMS	I	Input terminal for test (open)
31	TRST	I	Reset terminal for test (open)
32 to 34	TEST1 - 3	I	Input terminal for test (connected to ground)
35	VDCA1	–	Power supply
36	UBIT	O	Output terminal for test (open)
37	XBIT	O	DST monitor terminal (open)
38 to 41	SUPDT0 - 3	O	Supplementary data output (open)
42	VSIOA1	–	Ground for I/O
43, 44	SUPDT4 - 5	O	Supplementary data output (open)
45	VDIOA1	–	Power supply for I/O
46, 47	SUPDT6 - 7	O	Supplementary data output (open)
48	SUPEN	O	Supplementary data acknoledge output (open)
49	VSCA2	–	Ground
50	NC	O	Output terminal for test (open)
51, 52	TEST4 - 5	I	Input terminal for test (connected to ground)
53	NC	O	Output terminal for test (open)
54	VDCA2	–	Power supply
55, 56	NC	O	Output terminal for test (open)
57	BCKASL	I	Bit clock I/O selection signal input for DSD data output (L:slave, H:master)
58	VXDSD0	–	Ground for DSD data output
59	BCKAI	I	Bit clock input for DSD data output (open)
60	BCKAO	O	Bit clock output for DSD data output
61	PHREFI	I	Phase reference signal input for DSD signal phase modulation (open)
62	PHREFO	O	Phase reference signal output for DSD signal phase modulation (open)
63	ZDFL	O	Lch zero data detection flag signal output (open)
64	DSAL	O	Lch DSD data output
65	ZDFR	O	Rch zero data detection flag signal output (open)
66	DSAR	O	Rch DSD data output

Pin No.	Pin Name	I/O	Description
67	VDDSD0	–	Power supply for DSD data output
68	ZDFC	O	Cch zero data detection flag signal output (open)
69	DSAC	O	Cch DSD data output
70	ZDFLFE	O	LFEch zero data detection flag signal output (open)
71	DSALFE	O	LFEch DSD data output
72	VSDSD1	–	Ground for DSD data output
73	ZDFLS	O	LSch zero data detection flag signal output (open)
74	DSALS	O	LSch DSD data output
75	ZDFRS	O	RSch zero data detection flag signal output (open)
76	DSARS	O	RSch DSD data output
77	VDDSD1	–	Power supply for DSD data output
78, 79	IOUT0 - 1	O	Output terminal for test (open)
80	VSCB0	–	Ground
81, 82	IOUT2 - 3	O	Output terminal for test (open)
83	VDCB0	–	Power supply
84, 85	IOUT4 -5	O	Output terminal for test (open)
86	VSIOB0	–	Ground for I/O
87	IANCO	O	Output terminal for test (open)
88	IFULL	I	Input teminal for test (connected to ground)
89	IEMPTY	I	Input teminal for test (connected to ground)
90	VDIOB0	–	Power supply for I/O
91	IFRM	O	Output terminal for test (open)
92	IOUTE	O	Output terminal for test (open)
93	IBCK	O	Output terminal for test (open)
94	VSCB1	–	Ground
95	IERR	I	Input teminal for test (connected to Vdd)
96	IANCI	I	Input teminal for test (connected to ground)
97	IPLAN	I	Input teminal for test (connected to Vdd)
98	IHOLD	O	Output terminal for test (open)
99	VDCB1	–	Power supply
100	IVLD	I	Input teminal for test (connected to ground)
101 to 105	IDIN0 - 4	I	Input teminal for test (connected to ground)
106	VSIOB1	–	Ground for I/O
107 to 109	IDIN5 -7	I	Input teminal for test (connected to ground)
110	VDIOB1	–	Power supply for I/O
111 to 114	WAD0 - 3	I	External A/D data input for PSP physical disc mark detection
115	TESTI	–	Input teminal for test (pull-down)
116	VSCB2	–	Ground
117 to 120	WAD4 - 7	I	External A/D data input for PSP physical disc mark detection
121	VDCB2	–	Power supply
122	WRFD	I	Input teminal for test (connected to ground)
123	WCK	I	Clock input for PSP physical disc mark detection
124 to 125	WAVDD0 - 1	–	A/D power supply for PSP physical disc mark detection (+2.5v)
126	WARFI	I	Analog RF signal input for PSP physical disc mark detection
127	WAVRB	I	A/D bottom reference input for PSP physical disc mark detection
128 to 129	WAVSS1 - 0	–	A/D ground for PSP physical disc mark detection
130	VSIOA2	–	Ground for I/O
131 to 134	DQ7 - 4	I/O	SDRAM data input/output terminal
135	VDIOA2	–	Power supply for I/O
136 to 139	DQ3 - 0	I/O	SDRAM data input/output terminal

Pin No.	Pin Name	I/O	Description
140	VSIOA3	–	Ground for I/O
141	DCLK	O	Clock output terminal for SDRAM
142	DCKE	O	Clock enable signal output for SDRAM
143	XWE	O	Write enable signal output for SDRAM
144	XCAS	O	Column address strobe signal output for SDRAM
145	XRAS	O	Row address strobe signal output for SDRAM
146	VDIOA3	–	Ground for I/O
147	NC	O	Output terminal for test (open)
148, 149	A11 -10	O	Address signal output for SDRAM
150	VSCA3	–	Ground
151, 152	A9 - 8	O	Address signal output for SDRAM
153	VDCA3	–	Power supply
154 to 157	A7 - 4	O	Address signal output for SDRAM
158	VSIOA4	–	Ground for I/O
159 to 162	A3 - 0	O	Address signal output for SDRAM
163	VDIOA4	–	Power supply for I/O
164	XSRQ	O	Data request output to the front end processor
165	XSHD	I	Headder flag input from the front end processor
166	SDCK	I	Data transfer clock input from the front end processor
167	XSAK	I	Data effective flag input from the front end processor
168	SDEF	I	Error flag input from the front end processor
169 to 176	SD0 -7	I	Stream data input from the front end processor

SECTION 7
EXPLODED VIEWS

NOTE:
- -XX, -X mean standardized parts, so they may have some difference from the original one.
- Items marked "*" are not stocked since they are seldom required for routine service. Some delay should be anticipated when ordering these items.
- The mechanical parts with no reference number in the exploded views are not supplied.
- Hardware (# mark) list and accessories and packing materials are given in the last of this parts list.

- Abbreviation
  - AR : Argentina model
  - AUS : Australian model
  - CND : Canadian model
  - EA : Saudi Arabia model
  - E12 : 220-240V AC area in E model
  - E32 : 110-240V AC area in E model
  - HK : Hong Kong model
  - KR : Korean model
  - MX : Mexican model
  - MY : Malaysia model
  - SP : Singapole model
  - TW : Taiwan model

The components identified by mark ⚠ or dotted line with mark ⚠ are critical for safety. Replace only with part number specified.

Les composants identifiés par une marque ⚠ sont critiques pour la sécurité. Ne les remplacer que par une pièce portant le numéro spécifié.

7-1. MAIN SECTION

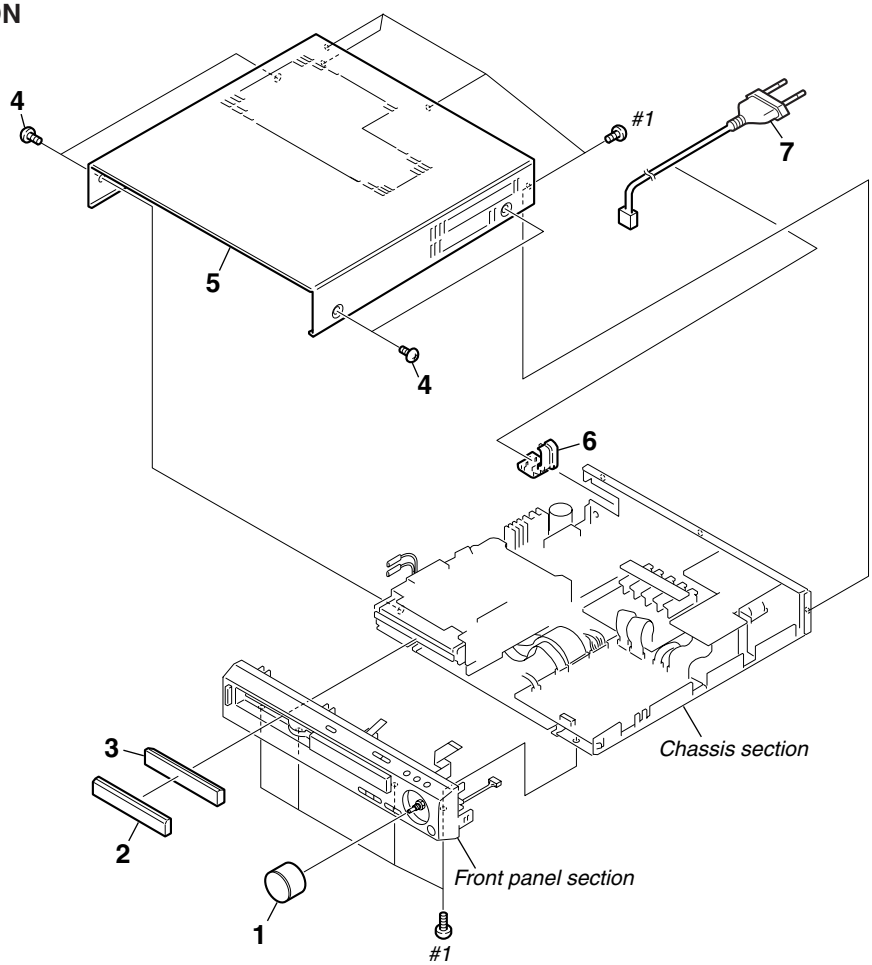

Ref. No.	Part No.	Description	Remark
1	X-4952-564-1	KNOB (VOL) ASSY	
2	X-4953-853-1	LID WINDOW SUB ASSY	
3	4-234-909-01	DVD LID	
4	4-221-580-01	SCREW, CASE	
5	4-234-913-01	CASE	
6	4-217-350-11	STOPPER, CORD	
⚠7	1-690-608-11	CORD, POWER (E12,E32,AUS)	
⚠7	1-696-169-21	CORD, POWER (AEP,CIS,UK,EA,MY,SP,HK,TW)	
⚠7	1-769-079-21	CORD, POWER (KR)	
⚠7	1-775-789-91	CORD, POWER (MX)	
⚠7	1-783-532-11	CORD, POWER (US,CND)	
⚠7	1-783-941-21	CORD, POWER (AR)	

7-2. FRONT PANEL SECTION

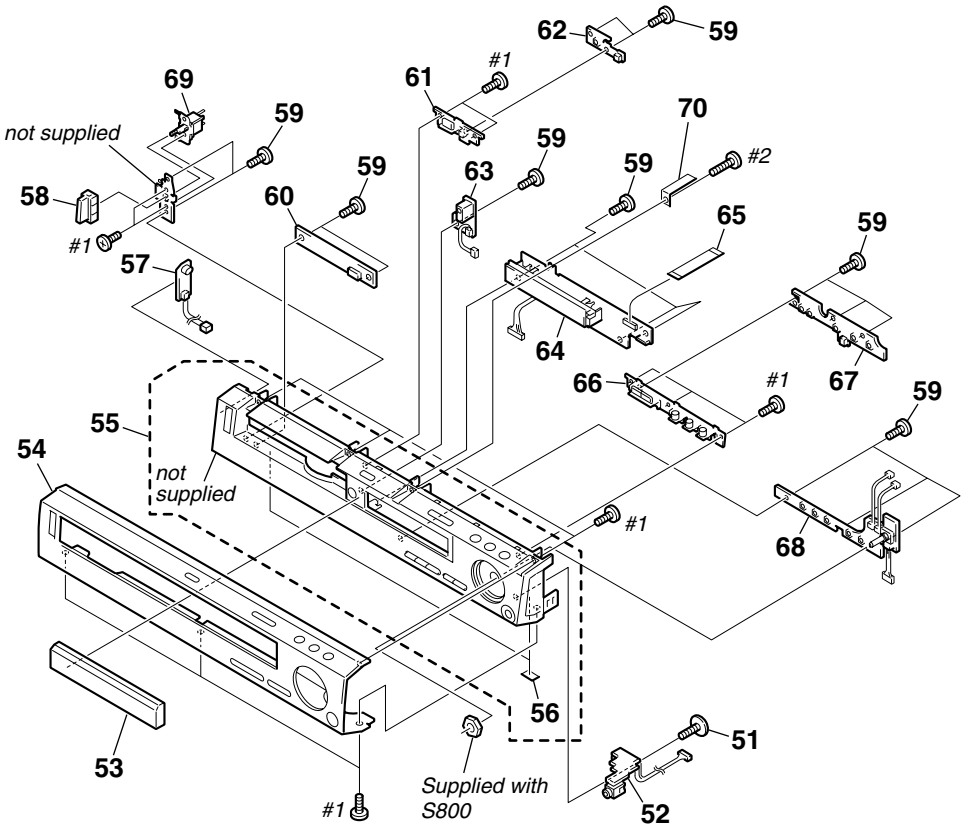

Ref. No.	Part No.	Description	Remark
51	3-229-336-01	SCREW, +BVWH TAPPING	
52	1-681-996-11	HP-1030 BOARD	
53	X-4953-854-1	FL WINDOW SUB ASSY	
54	4-234-907-01	PANEL (AL), FRONT (S500)	
54	4-236-125-01	PANEL (AL), FRONT (S800)	
55	X-4953-856-1	PANEL ASSY, FRONT	
56	4-234-924-01	FOOT	
57	1-681-994-11	PW-1030 BOARD	
58	X-4953-855-1	POWER BUTTON SUB ASSY	
59	4-931-757-31	SCREW(DIA.2.6X8)(IT3B),TAPPING	
60	1-681-990-11	DDCON-1030 BOARD	

Ref. No.	Part No.	Description	Remark
61	4-234-904-01	BUTTON (EJECT)	
62	1-681-993-11	SW (B)-1030 BOARD	
63	1-681-995-11	RR-1030 BOARD	
64	A-4726-419-A	FP-1030 BOARD, COMPLETE	
65	1-823-076-11	CABLE, FLEXIBLE FLAT (15 CORE)	
66	4-234-905-01	BUTTON (DVD)	
67	1-681-992-11	SW (A)-1030 BOARD	
68	1-681-991-11	FU-1030 BOARD	
69	1-786-210-11	SWITCH, POWER	
70	4-237-279-01	EARTH PLATE (FL)	

7-3. CHASSIS SECTION

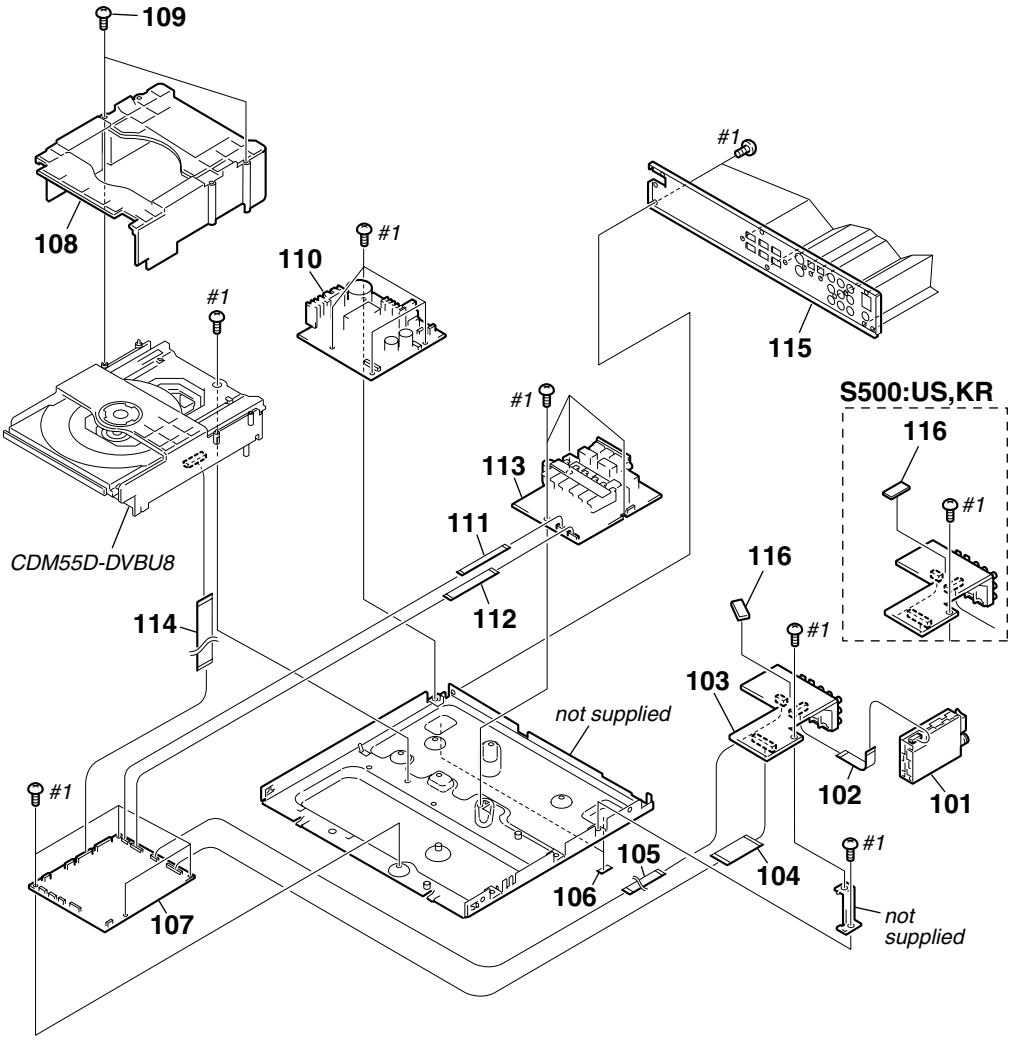

Ref. No.	Part No.	Description	Remark
101	A-4726-404-A	TUNER UNIT (US,CND)	
101	A-4726-588-A	TUNER UNIT (AEP,CIS,UK,KR,TW,AUS)	
101	A-4726-594-A	TUNER UNIT (MX)	
101	A-4726-905-A	TUNER UNIT (E12,E32,EA,HK,SP,MY,AR)	
102	1-823-082-11	CABLE, FLEXIBLE FLAT (13 CORE)	
103	A-4726-402-A	I/O BOARD, COMPLETE (EXCEPT S500:AEP,CIS,UK/S800)	
103	A-4726-592-A	I/O BOARD, COMPLETE (S500:CIS/S800)	
103	A-4726-827-A	I/O BOARD, COMPLETE (S500:AEP,UK)	
104	1-823-079-11	CABLE, FLEXIBLE FLAT (29 CORE)	
105	1-823-074-11	CABLE, FLEXIBLE FLAT (9 CORE)	
106	4-234-924-01	FOOT	
107	A-4726-890-A	DVD BOARD, COMPLETE (S500:HK,TW)	
107	A-4726-893-A	DVD BOARD, COMPLETE (S500:AR)	
107	A-4726-897-A	DVD BOARD, COMPLETE (S500:AUS)	
107	A-4726-901-A	DVD BOARD, COMPLETE (S500:EA)	
107	A-4726-907-A	DVD BOARD, COMPLETE (S500:MY,SP)	
107	A-4726-910-A	DVD BOARD, COMPLETE (S500:E12)	
107	A-4726-942-A	DVD BOARD, COMPLETE (S500:US,CND)	
107	A-4726-948-A	DVD BOARD, COMPLETE (S500:E32,MX)	
107	A-4726-952-A	DVD BOARD, COMPLETE (S800:AEP,CIS,UK)	
107	A-4726-954-A	DVD BOARD, COMPLETE (S500:AEP,UK)	
107	A-4727-007-A	DVD BOARD, COMPLETE (S500:KR)	
107	A-4727-399-A	DVD BOARD, COMPLETE (S800:EA)	
107	A-4727-402-A	DVD BOARD, COMPLETE (S800:HK,TW)	
107	A-4727-407-A	DVD BOARD, COMPLETE (S800:AUS)	
107	A-4727-600-A	DVD BOARD, COMPLETE (S800:KR)	
107	A-4727-603-A	DVD BOARD, COMPLETE (S800:MX)	
107	A-4727-740-A	DVD BOARD, COMPLETE (S500:CIS)	
108	4-234-906-01	COVER, MD	
109	4-931-757-31	SCREW(DIA.2.6X8)(IT3B),TAPPING	
110	A-4726-412-A	POWER BOARD, COMPLETE (S500:US)	
110	A-4726-413-A	POWER BOARD, COMPLETE (S500:CND)	
110	A-4726-597-A	POWER BOARD, COMPLETE (S500:MX)	
110	A-4726-829-A	POWER BOARD, COMPLETE (S500:AEP,CIS,UK)	
110	A-4726-892-A	POWER BOARD, COMPLETE (S500:TW)	
110	A-4726-899-A	POWER BOARD, COMPLETE (S500:AUS/S800:AUS)	
110	A-4726-900-A	POWER BOARD, COMPLETE (S500:E32,EA)	
110	A-4726-909-A	POWER BOARD, COMPLETE (S500:E12,MY,SP,HK,AR)	
110	A-4726-593-A	POWER BOARD, COMPLETE (S800:AEP,CIS,UK)	
110	A-4727-401-A	POWER BOARD, COMPLETE (S800:EA)	
110	A-4727-404-A	POWER BOARD, COMPLETE (S800:HK)	
110	A-4727-410-A	POWER BOARD, COMPLETE (S800:TW)	
110	A-4727-602-A	POWER BOARD, COMPLETE (S500:KR/S800:KR)	
110	A-4727-604-A	POWER BOARD, COMPLETE (S800:MX)	
111	1-823-075-11	CABLE, FLEXIBLE FLAT (12 CORE)	
112	1-823-353-11	CABLE, FLEXIBLE FLAT (17 CORE)	
113	A-4726-398-A	AMP BOARD, COMPLETE (S500:US,CND,MX/S800,MX)	
113	A-4726-586-A	AMP BOARD, COMPLETE (S500:CIS/S800:AEP,CIS,UK,KR)	
113	A-4726-819-A	AMP BOARD, COMPLETE (S500:AEP,UK,KR)	
113	A-4726-895-A	AMP BOARD, COMPLETE (S500:TW,AUS)	
113	A-4726-903-A	AMP BOARD, COMPLETE (S500:E12,E32,EA,MY,SP,HK,AR)	
113	A-4727-397-A	AMP BOARD, COMPLETE (S800:EA,HK)	
113	A-4727-405-A	AMP BOARD, COMPLETE (S800:TW,AUS)	
114	1-823-354-11	CABLE, FLEXIBLE FLAT (25 CORE)	
115	4-237-192-31	PANEL, BACK (S800:KR)	
115	X-4953-858-1	BACK PANEL SUB ASSY (S500:US)	
115	X-4953-988-1	PANEL SUB ASSY, BACK (S500:CND)	
115	X-4954-027-1	BACK PANEL SUB ASSY (S800:UK)	
115	X-4954-028-1	BACK PANEL SUB ASSY (S800:AEP)	
115	X-4954-029-1	BACK PANEL SUB ASSY (S500:MX)	
115	X-4954-105-1	PANEL ASSY, BACK (S500:UK)	
115	X-4954-113-1	PANEL ASSY, BACK (S500:AEP)	
115	X-4954-137-1	BACK PANEL SUB ASSY (S500:E32)	
115	X-4954-138-1	BACK PANEL SUB ASSY (S500:AUS)	
115	X-4954-139-1	BACK PANEL SUB ASSY (S500:MY,SP)	
115	X-4954-140-1	BACK PANEL SUB ASSY (S500:HK)	
115	X-4954-141-1	BACK PANEL SUB ASSY (S500:E12)	
115	X-4954-142-1	BACK PANEL SUB ASSY (S500:TW)	
115	X-4954-143-1	BACK PANEL SUB ASSY (S500:AR)	
115	X-4954-144-1	BACK PANEL SUB ASSY (S500:EA)	
115	X-4954-159-1	PANEL ASSY, BACK (S500:KR)	
115	X-4954-247-1	PANEL ASSY, BACK (S800:CIS)	
115	X-4954-248-1	PANEL ASSY, BACK (S800:EA)	
115	X-4954-249-1	PANEL ASSY, BACK (S800:HK)	
115	X-4954-250-1	PANEL ASSY, BACK (S800:AUS)	
115	X-4954-251-1	PANEL ASSY, BACK (S800:TW)	
115	X-4954-357-1	BACK PANEL SUB ASSY (S800:MX)	
115	X-4954-357-1	BACK PANEL SUB ASSY (S500:KR)	
116	1-400-173-11	FERRITE BOARD, MULTI HOLE (S500:US,KR)	
116	1-543-563-11	FERRITE BOARD, MULTI HOLE (S500:AEP,UK)	

7-4. MECHANISM DECK SECTION (CDM55D-DVBU8)

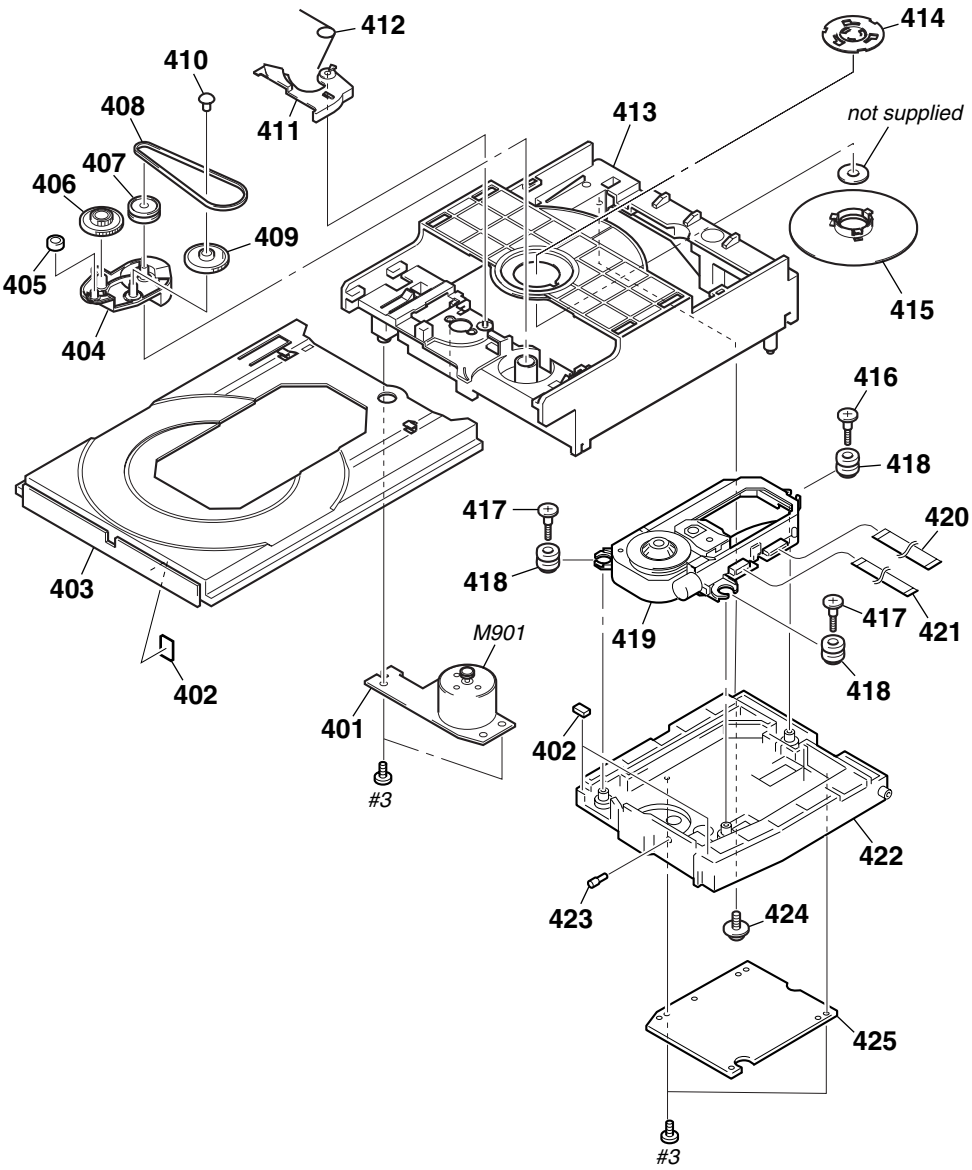

Ref. No.	Part No.	Description	Remark
401	1-676-599-11	LOADING BOARD	
402	4-925-315-31	DAMPER	
403	4-224-894-01	TRAY	
404	4-220-233-01	CAM (CDM55)	
405	4-221-815-01	ROLLER	
406	4-220-237-01	GEAR (A)	
407	4-220-234-01	PULLEY (LDG)	
408	4-221-816-01	BELT (CDM55)	
409	4-220-238-01	GEAR (B)	
410	4-227-598-01	SPACER (55)	
411	4-220-229-01	LEVER (SW)	
412	4-220-239-01	SPRING, TORSION	
413	4-225-884-01	CHASSIS (55D)	
414	4-235-116-01	PULLEY (A-240)	

Ref. No.	Part No.	Description	Remark
415	4-234-766-01	PULLEY (B-240)	
416	4-236-450-01	SCREW (L), STEP	
417	4-981-923-01	SCREW (M), STEP	
418	3-053-847-11	INSULATOR	
⚠419	8-820-144-06	DEVICE,OPTICAL KHM-240AAA	
420	1-823-072-11	CABLE, FLEXIBLE FLAT 26P	
421	1-823-073-11	CABLE, FLEXIBLE FLAT (9 CORE)	
422	4-234-374-01	HOLDER (KHM-240)	
423	4-221-817-02	SHAFT (BU)	
424	4-985-672-01	SCREW (+PTPWHM2.6), FLOATING	
425	A-4726-850-A	RF-240 BOARD, COMPLETE	
M901	A-2004-893-A	MOTOR (LD) ASSY	

The components identified by mark ⚠ or dotted line with mark ⚠ are critical for safety. Replace only with part number specified.	Les composants identifiés par une marque ⚠ sont critiques pour la sécurité. Ne les remplacer que par une pièce portant le numéro spécifié.

SECTION 8
ELECTRICAL PARTS LIST

Note:
- Due to standardization, replacements in the parts list may be different from the parts specified in the diagrams or the components used on the set.
- -XX, -X mean standardized parts, so they may have some difference from the original one.
- Items marked "*" are not stocked since they are seldom required for routine service. Some delay should be anticipated when ordering these items.
- RESISTORS
  All resistors are in ohms
  METAL: Metal-film resistor
  METAL OXIDE: Metal Oxide-film resistor
  F : nonflammable
- SEMICONDUCTORS
  In each case, u: µ , for example:
  uA...: µ A..., uPA...: µ PA..., uPB...: µ PB..., uPC...: µ PC..., uPD...: µ PD...
- CAPACITORS
  uF : µ F
- COILS
  uH : µ H
- Abbreviation
  AR : Argentina model
  AUS : Australian model
  CND : Canadian model
  EA : Saudi Arabia model
  E12 : 220-240V AC area in E model
  E32 : 110-240V AC area in E model
  HK : Hong Kong model
  KR : Korean model
  MX : Mexican model
  MY : Malaysia model
  SP : Singapole model
  TW : Taiwan model

When indicating parts by reference number, please include the board name.

The components identified by mark ⚠ or dotted line with mark ⚠ are critical for safety. Replace only with part number specified.

Les composants identifiés par une marque ⚠ sont critiques pour la sécurité.
Ne les remplacer que par une pièce portant le numéro spécifié.

Ref. No.	Part No.	Description	Remark
	A-4726-398-A	AMP BOARD, COMPLETE	(S500:US,CND,MX/S800,MX)
		**********	
	A-4726-586-A	AMP BOARD, COMPLETE	(S500:CIS/S800:AEP,CIS,UK,KR)
		**********	
	A-4726-819-A	AMP BOARD, COMPLETE (S500:AEP,UK,KR)	
		**********	
	A-4726-895-A	AMP BOARD, COMPLETE (S500:TW,AUS)	
		**********	
	A-4726-903-A	AMP BOARD, COMPLETE	
		**********	
			(S500:E12,E32,EA,MY,SP,HK,AR)
	A-4727-397-A	AMP BOARD, COMPLETE (S800:EA,HK)	
		**********	
	A-4727-405-A	AMP BOARD, COMPLETE (S800:TW,AUS)	
		**********	
	7-685-646-79	SCREW +BVTP 3X8 TYPE2 N-S	
		< CAPACITOR >	
C300	1-126-953-11	ELECT 2200uF 20.00% 35V	(S500:US,CND,AEP,CIS,UK,MX,KR/S800)
C300	1-126-973-11	ELECT 2200uF 20.00% 50V	(EXCEPT S500:US,CND,AEP,CIS,UK,MX,KR/S800)
C301	1-126-965-11	ELECT 22uF 20.00% 50V	
C302	1-162-970-11	CERAMIC CHIP 0.01uF 10% 25V	
C303	1-136-157-00	MYLAR 0.022uF 5.00% 50V	
C304	1-136-157-00	MYLAR 0.022uF 5.00% 50V	
C305	1-163-021-11	CERAMIC CHIP 0.01uF 10.00% 50V	(EXCEPT S500:US,CND,AEP,CIS,UK,MX,KR/S800)
C305	1-136-165-00	MYLAR 0.1uF 5.00% 50V	(S500:US,CND,AEP,CIS,UK,MX,KR/S800)
C306	1-162-970-11	CERAMIC CHIP 0.01uF 10% 25V	
C307	1-162-915-11	CERAMIC CHIP 10PF 0.5PF 50V	(EXCEPT S500:US,CND,AEP,CIS,UK,MX,KR/S800)
C307	1-162-923-11	CERAMIC CHIP 47PF 5% 50V	(S500:US,CND,AEP,CIS,UK,MX,KR/S800)
C308	1-162-964-11	CERAMIC CHIP 0.001uF 10% 50V	
C309	1-164-156-11	CERAMIC CHIP 0.1uF 25V	
C310	1-162-970-11	CERAMIC CHIP 0.01uF 10% 25V	
C311	1-162-970-11	CERAMIC CHIP 0.01uF 10% 25V	
C312	1-104-665-11	ELECT 100uF 20.00% 10V	
C313	1-163-021-11	CERAMIC CHIP 0.01uF 10.00% 50V	(EXCEPT S500:US,CND,AEP,CIS,UK,MX,KR/S800)
C313	1-136-165-00	MYLAR 0.1uF 5.00% 50V	(S500:US,CND,AEP,CIS,UK,MX,KR/S800)
C316	1-163-021-11	CERAMIC CHIP 0.01uF 10.00% 50V	
C317	1-126-948-11	ELECT 100uF 20.00% 35V	(S500:US,CND,AEP,CIS,UK,MX,KR/S800)
C317	1-126-968-11	ELECT 100uF 20.00% 50V	(EXCEPT S500:US,CND,AEP,CIS,UK,MX,KR/S800)
C318	1-104-665-11	ELECT 100uF 20.00% 10V	(S500:US,CND,AEP,CIS,UK,MX,KR/S800)
C318	1-136-165-00	MYLAR 0.1uF 5.00% 50V	(EXCEPT S500:US,CND,AEP,CIS,UK,MX,KR/S800)
C319	1-107-826-11	CERAMIC CHIP 0.1uF 10.00% 16V	(S500:US,CND,AEP,CIS,UK,MX,KR/S800)
C319	1-162-970-11	CERAMIC CHIP 0.01uF 10% 25V	(EXCEPT S500:US,CND,AEP,CIS,UK,MX,KR/S800)
C320	1-104-665-11	ELECT 100uF 20.00% 10V	
C323	1-162-970-11	CERAMIC CHIP 0.01uF 10% 25V	
C324	1-162-970-11	CERAMIC CHIP 0.01uF 10% 25V	
C325	1-104-665-11	ELECT 100uF 20.00% 10V	
C326	1-126-947-11	ELECT 47uF 20.00% 10V	
C327	1-162-970-11	CERAMIC CHIP 0.01uF 10% 25V	
C328	1-107-826-11	CERAMIC CHIP 0.1uF 10.00% 16V	(S500:US,CND,AEP,CIS,UK,MX,KR/S800)
C328	1-162-970-11	CERAMIC CHIP 0.01uF 10% 25V	(EXCEPT S500:US,CND,AEP,CIS,UK,MX,KR/S800)
C329	1-126-934-11	ELECT 220uF 20.00% 10V	
C330	1-162-970-11	CERAMIC CHIP 0.01uF 10% 25V	
C331	1-107-826-11	CERAMIC CHIP 0.1uF 10.00% 16V	(S500:US,CND,AEP,CIS,UK,MX,KR/S800)
C331	1-162-970-11	CERAMIC CHIP 0.01uF 10% 25V	(EXCEPT S500:US,CND,AEP,CIS,UK,MX,KR/S800)
C332	1-136-157-00	MYLAR 0.022uF 5.00% 50V	
C333	1-136-157-00	MYLAR 0.022uF 5.00% 50V	
C334	1-136-165-00	MYLAR 0.1uF 5.00% 50V	(S500:US,CND,AEP,CIS,UK,MX,KR/S800)
C334	1-163-021-11	CERAMIC CHIP 0.01uF 10.00% 50V	(EXCEPT S500:US,CND,AEP,CIS,UK,MX,KR/S800)
C335	1-136-165-00	MYLAR 0.1uF 5.00% 50V	(S500:US,CND,AEP,CIS,UK,MX,KR/S800)
C335	1-163-021-11	CERAMIC CHIP 0.01uF 10.00% 50V	(EXCEPT S500:US,CND,AEP,CIS,UK,MX,KR/S800)
C336	1-104-665-11	ELECT 100uF 20.00% 10V	
C337	1-107-826-11	CERAMIC CHIP 0.1uF 10.00% 16V	(S500:US,CND,AEP,CIS,UK,MX,KR/S800)
C337	1-162-970-11	CERAMIC CHIP 0.01uF 10% 25V	(EXCEPT S500:US,CND,AEP,CIS,UK,MX,KR/S800)
C341	1-163-021-11	CERAMIC CHIP 0.01uF 10.00% 50V	
C342	1-126-948-11	ELECT 100uF 20.00% 35V	(S500:US,CND,AEP,CIS,UK,MX,KR/S800)
C342	1-126-968-11	ELECT 100uF 20.00% 50V	(EXCEPT S500:US,CND,AEP,CIS,UK,MX,KR/S800)
C343	1-107-826-11	CERAMIC CHIP 0.1uF 10.00% 16V	(S500:US,CND,AEP,CIS,UK,MX,KR/S800)

Ref. No.	Part No.	Description	Remarks
C343	1-162-970-11	CERAMIC CHIP 0.01uF 10% 25V	(EXCEPT S500:US,CND,AEP,CIS,UK,MX,KR/S800)
C344	1-162-970-11	CERAMIC CHIP 0.01uF 10% 25V	
C345	1-104-665-11	ELECT 100uF 20.00% 10V	(S500:US,CND,AEP,CIS,UK,MX,KR/S800)
C345	1-136-165-00	MYLAR 0.1uF 5.00% 50V	(EXCEPT S500:US,CND,AEP,CIS,UK,MX,KR/S800)
C348	1-162-970-11	CERAMIC CHIP 0.01uF 10% 25V	
C349	1-162-970-11	CERAMIC CHIP 0.01uF 10% 25V	
C350	1-104-665-11	ELECT 100uF 20.00% 10V	
C351	1-107-826-11	CERAMIC CHIP 0.1uF 10.00% 16V	(S500:US,CND,AEP,CIS,UK,MX,KR/S800)
C351	1-162-970-11	CERAMIC CHIP 0.01uF 10% 25V	(EXCEPT S500:US,CND,AEP,CIS,UK,MX,KR/S800)
C352	1-162-970-11	CERAMIC CHIP 0.01uF 10% 25V	
C353	1-136-157-00	MYLAR 0.022uF 5.00% 50V	
C354	1-136-157-00	MYLAR 0.022uF 5.00% 50V	
C355	1-107-826-11	CERAMIC CHIP 0.1uF 10.00% 16V	(S500:US,CND,AEP,CIS,UK,MX,KR/S800)
C355	1-162-970-11	CERAMIC CHIP 0.01uF 10% 25V	(EXCEPT S500:US,CND,AEP,CIS,UK,MX,KR/S800)
C356	1-136-165-00	MYLAR 0.1uF 5.00% 50V	(S500:US,CND,AEP,CIS,UK,MX,KR/S800)
C356	1-163-021-11	CERAMIC CHIP 0.01uF 10.00% 50V	(EXCEPT S500:US,CND,AEP,CIS,UK,MX,KR/S800)
C357	1-136-165-00	MYLAR 0.1uF 5.00% 50V	(S500:US,CND,AEP,CIS,UK,MX,KR/S800)
C357	1-163-021-11	CERAMIC CHIP 0.01uF 10.00% 50V	(EXCEPT S500:US,CND,AEP,CIS,UK,MX,KR/S800)
C358	1-162-970-11	CERAMIC CHIP 0.01uF 10% 25V	
C359	1-162-970-11	CERAMIC CHIP 0.01uF 10% 25V	
C362	1-104-665-11	ELECT 100uF 20.00% 10V	(S500:US,CND,AEP,CIS,UK,MX,KR/S800)
C362	1-136-165-00	MYLAR 0.1uF 5.00% 50V	(EXCEPT S500:US,CND,AEP,CIS,UK,MX,KR/S800)
C363	1-163-021-11	CERAMIC CHIP 0.01uF 10.00% 50V	
C364	1-126-948-11	ELECT 100uF 20.00% 35V	(S500:US,CND,AEP,CIS,UK,MX,KR/S800)
C364	1-126-968-11	ELECT 100uF 20.00% 50V	(EXCEPT S500:US,CND,AEP,CIS,UK,MX,KR/S800)
C365	1-107-826-11	CERAMIC CHIP 0.1uF 10.00% 16V	(S500:US,CND,AEP,CIS,UK,MX,KR/S800)
C365	1-162-970-11	CERAMIC CHIP 0.01uF 10% 25V	(EXCEPT S500:US,CND,AEP,CIS,UK,MX,KR/S800)
C368	1-107-826-11	CERAMIC CHIP 0.1uF 10.00% 16V	(S500:US,CND,AEP,CIS,UK,MX,KR/S800)
C368	1-162-970-11	CERAMIC CHIP 0.01uF 10% 25V	(EXCEPT S500:US,CND,AEP,CIS,UK,MX,KR/S800)
C372	1-107-826-11	CERAMIC CHIP 0.1uF 10.00% 16V	(S500:US,CND,AEP,CIS,UK,MX,KR/S800)
C372	1-162-970-11	CERAMIC CHIP 0.01uF 10% 25V	(EXCEPT S500:US,CND,AEP,CIS,UK,MX,KR/S800)
C373	1-162-970-11	CERAMIC CHIP 0.01uF 10% 25V	
C374	1-136-157-00	MYLAR 0.022uF 5.00% 50V	
C375	1-136-157-00	MYLAR 0.022uF 5.00% 50V	
C376	1-136-165-11	MYLAR 0.1uF 5.00% 50V	(S500:US,CND,AEP,CIS,UK,MX,KR/S800)
C376	1-163-021-91	CERAMIC CHIP 0.01uF 10.00% 50V	(EXCEPT S500:US,CND,AEP,CIS,UK,MX,KR/S800)
C377	1-136-165-00	MYLAR 0.1uF 5.00% 50V	(S500:US,CND,AEP,CIS,UK,MX,KR/S800)
C377	1-163-021-91	CERAMIC CHIP 0.01uF 10.00% 50V	(EXCEPT S500:US,CND,AEP,CIS,UK,MX,KR/S800)
C378	1-107-826-11	CERAMIC CHIP 0.1uF 10.00% 16V	(S500:US,CND,AEP,CIS,UK,MX,KR/S800)
C378	1-162-970-11	CERAMIC CHIP 0.01uF 10% 25V	(EXCEPT S500:US,CND,AEP,CIS,UK,MX,KR/S800)
C381	1-104-665-11	ELECT 100uF 20.00% 10V	(S500:US,CND,AEP,CIS,UK,MX,KR/S800)
C381	1-136-165-00	MYLAR 0.1uF 5.00% 50V	(EXCEPT S500:US,CND,AEP,CIS,UK,MX,KR/S800)
C382	1-163-021-11	CERAMIC CHIP 0.01uF 10.00% 50V	
C383	1-126-948-11	ELECT 100uF 20.00% 35V	(S500:US,CND,AEP,CIS,UK,MX,KR/S800)
C383	1-126-968-11	ELECT 100uF 20.00% 50V	(EXCEPT S500:US,CND,AEP,CIS,UK,MX,KR/S800)
C384	1-107-826-11	CERAMIC CHIP 0.1uF 10.00% 16V	(S500:US,CND,AEP,CIS,UK,MX,KR/S800)
C384	1-162-970-11	CERAMIC CHIP 0.01uF 10% 25V	(EXCEPT S500:US,CND,AEP,CIS,UK,MX,KR/S800)
C387	1-162-970-11	CERAMIC CHIP 0.01uF 10% 25V	
C388	1-162-970-11	CERAMIC CHIP 0.01uF 10% 25V	
C389	1-104-665-11	ELECT 100uF 20.00% 10V	
C390	1-162-970-11	CERAMIC CHIP 0.01uF 10% 25V	
C391	1-162-970-11	CERAMIC CHIP 0.01uF 10% 25V	
C392	1-104-665-11	ELECT 100uF 20.00% 10V	
C393	1-162-970-11	CERAMIC CHIP 0.01uF 10% 25V	
C394	1-107-826-11	CERAMIC CHIP 0.1uF 10.00% 16V	(S500:US,CND,AEP,CIS,UK,MX,KR/S800)
C394	1-162-970-11	CERAMIC CHIP 0.01uF 10% 25V	(EXCEPT S500:US,CND,AEP,CIS,UK,MX,KR/S800)
C395	1-136-157-00	MYLAR 0.022uF 5.00% 50V	
C396	1-136-157-00	MYLAR 0.022uF 5.00% 50V	
C397	1-136-165-00	MYLAR 0.1uF 5.00% 50V	(S500:US,CND,AEP,CIS,UK,MX,KR/S800)
C397	1-163-021-11	CERAMIC CHIP 0.01uF 10.00% 50V	(EXCEPT S500:US,CND,AEP,CIS,UK,MX,KR/S800)
C398	1-136-165-00	MYLAR 0.1uF 5.00% 50V	(S500:US,CND,AEP,CIS,UK,MX,KR/S800)
C398	1-163-021-11	CERAMIC CHIP 0.01uF 10.00% 50V	(EXCEPT S500:US,CND,AEP,CIS,UK,MX,KR/S800)
C399	1-107-826-11	CERAMIC CHIP 0.1uF 10.00% 16V	(S500:US,CND,AEP,CIS,UK,MX,KR/S800)
C399	1-162-970-11	CERAMIC CHIP 0.01uF 10% 25V	(EXCEPT S500:US,CND,AEP,CIS,UK,MX,KR/S800)
C402	1-163-021-11	CERAMIC CHIP 0.01uF 10.00% 50V	
C403	1-126-948-11	ELECT 100uF 20.00% 35V	(S500:US,CND,AEP,CIS,UK,MX,KR/S800)
C403	1-126-968-11	ELECT 100uF 20.00% 50V	(EXCEPT S500:US,CND,AEP,CIS,UK,MX,KR/S800)
C404	1-107-826-11	CERAMIC CHIP 0.1uF 10.00% 16V	(S500:US,CND,AEP,CIS,UK,MX,KR/S800)
C404	1-162-970-11	CERAMIC CHIP 0.01uF 10% 25V	(EXCEPT S500:US,CND,AEP,CIS,UK,MX,KR/S800)
C405	1-104-665-11	ELECT 100uF 20.00% 10V	(S500:US,CND,AEP,CIS,UK,MX,KR/S800)

Ref. No.	Part No.	Description	Remarks
C405	1-136-165-00	MYLAR 0.1uF 5.00% 50V	(EXCEPT S500:US,CND,AEP,CIS,UK,MX,KR/S800)
C408	1-107-826-11	CERAMIC CHIP 0.1uF 10.00% 16V	(S500:US,CND,AEP,CIS,UK,MX,KR/S800)
C408	1-162-970-11	CERAMIC CHIP 0.01uF 10% 25V	(EXCEPT S500:US,CND,AEP,CIS,UK,MX,KR/S800)
C409	1-162-970-11	CERAMIC CHIP 0.01uF 10% 25V	
C410	1-107-826-11	CERAMIC CHIP 0.1uF 10.00% 16V	(S500:US,CND,AEP,CIS,UK,MX,KR/S800)
C410	1-162-970-11	CERAMIC CHIP 0.01uF 10% 25V	(EXCEPT S500:US,CND,AEP,CIS,UK,MX,KR/S800)
C411	1-136-157-00	MYLAR 0.022uF 5.00% 50V	
C412	1-136-157-00	MYLAR 0.022uF 5.00% 50V	
C413	1-136-165-00	MYLAR 0.1uF 5.00% 50V	(S500:US,CND,AEP,CIS,UK,MX,KR/S800)
C413	1-163-021-11	CERAMIC CHIP 0.01uF 10.00% 50V	(EXCEPT S500:US,CND,AEP,CIS,UK,MX,KR/S800)
C414	1-136-165-00	MYLAR 0.1uF 5.00% 50V	(S500:US,CND,AEP,CIS,UK,MX,KR/S800)
C414	1-163-021-11	CERAMIC CHIP 0.01uF 10.00% 50V	(EXCEPT S500:US,CND,AEP,CIS,UK,MX,KR/S800)
C415	1-162-970-11	CERAMIC CHIP 0.01uF 10% 25V	
C416	1-162-970-11	CERAMIC CHIP 0.01uF 10% 25V	
C419	1-163-021-11	CERAMIC CHIP 0.01uF 10.00% 50V	
C420	1-126-948-11	ELECT 100uF 20.00% 35V	(S500:US,CND,AEP,CIS,UK,MX,KR/S800)
C420	1-126-968-11	ELECT 100uF 20.00% 50V	(EXCEPT S500:US,CND,AEP,CIS,UK,MX,KR/S800)
C421	1-107-826-11	CERAMIC CHIP 0.1uF 10.00% 16V	(S500:US,CND,AEP,CIS,UK,MX,KR/S800)
C421	1-162-970-11	CERAMIC CHIP 0.01uF 10% 25V	(EXCEPT S500:US,CND,AEP,CIS,UK,MX,KR/S800)
C422	1-104-665-11	ELECT 100uF 20.00% 10V	(S500:US,CND,AEP,CIS,UK,MX,KR/S800)
C422	1-136-165-00	MYLAR 0.1uF 5.00% 50V	(EXCEPT S500:US,CND,AEP,CIS,UK,MX,KR/S800)
C425	1-162-970-11	CERAMIC CHIP 0.01uF 10% 25V	
C432	1-162-915-11	CERAMIC CHIP 10PF 0.5PF 50V	
C433	1-162-910-11	CERAMIC CHIP 5PF 0.25PF 50V	(S500:US,CND,AEP,CIS,UK,MX,KR/S800)
C434	1-162-927-11	CERAMIC CHIP 100PF 5% 50V	(S500:US,CND,AEP,CIS,UK,MX,KR/S800)
C451	1-131-704-11	FILM 1uF 5% 50V	(S500:US,CND,AEP,CIS,UK,MX,KR/S800)
C451	1-136-177-00	MYLAR 1uF 5.00% 50V	(EXCEPT S500:US,CND,AEP,CIS,UK,MX,KR/S800)
C452	1-131-704-11	FILM 1uF 5% 50V	(S500:US,CND,AEP,CIS,UK,MX,KR/S800)
C452	1-136-177-00	MYLAR 1uF 5.00% 50V	(EXCEPT S500:US,CND,AEP,CIS,UK,MX,KR/S800)
C453	1-131-704-11	FILM 1uF 5% 50V	(S500:US,CND,AEP,CIS,UK,MX,KR/S800)
C453	1-136-177-00	MYLAR 1uF 5.00% 50V	(EXCEPT S500:US,CND,AEP,CIS,UK,MX,KR/S800)
C454	1-131-704-11	FILM 1uF 5% 50V	(S500:US,CND,AEP,CIS,UK,MX,KR/S800)
C454	1-136-177-00	MYLAR 1uF 5.00% 50V	(EXCEPT S500:US,CND,AEP,CIS,UK,MX,KR/S800)
C455	1-131-704-11	FILM 1uF 5% 50V	(S500:US,CND,AEP,CIS,UK,MX,KR/S800)
C455	1-136-177-00	MYLAR 1uF 5.00% 50V	(EXCEPT S500:US,CND,AEP,CIS,UK,MX,KR/S800)
C456	1-131-704-11	FILM 1uF 5% 50V	(S500:US,CND,AEP,CIS,UK,MX,KR/S800)
C456	1-136-177-00	MYLAR 1uF 5.00% 50V	(EXCEPT S500:US,CND,AEP,CIS,UK,MX,KR/S800)
C457	1-131-704-11	FILM 1uF 5% 50V	(S500:US,CND,AEP,CIS,UK,MX,KR/S800)
C457	1-136-177-00	MYLAR 1uF 5.00% 50V	(EXCEPT S500:US,CND,AEP,CIS,UK,MX,KR/S800)
C458	1-131-704-11	FILM 1uF 5% 50V	(S500:US,CND,AEP,CIS,UK,MX,KR/S800)
C458	1-136-177-00	MYLAR 1uF 5.00% 50V	(EXCEPT S500:US,CND,AEP,CIS,UK,MX,KR/S800)
C459	1-131-704-11	FILM 1uF 5% 50V	(S500:US,CND,AEP,CIS,UK,MX,KR/S800)
C459	1-136-177-00	MYLAR 1uF 5.00% 50V	(EXCEPT S500:US,CND,AEP,CIS,UK,MX,KR/S800)
C460	1-131-704-11	FILM 1uF 5% 50V	(S500:US,CND,AEP,CIS,UK,MX,KR/S800)
C460	1-136-177-00	MYLAR 1uF 5.00% 50V	(EXCEPT S500:US,CND,AEP,CIS,UK,MX,KR/S800)
C461	1-131-704-11	FILM 1uF 5% 50V	(S500:US,CND,AEP,CIS,UK,MX,KR/S800)
C461	1-136-177-00	MYLAR 1uF 5.00% 50V	(EXCEPT S500:US,CND,AEP,CIS,UK,MX,KR/S800)
C462	1-131-704-11	FILM 1uF 5% 50V	(S500:US,CND,AEP,CIS,UK,MX,KR/S800)
C462	1-136-177-00	MYLAR 1uF 5.00% 50V	(EXCEPT S500:US,CND,AEP,CIS,UK,MX,KR/S800)
C474	1-136-165-00	MYLAR 0.1uF 5.00% 50V	
C484	1-126-935-11	CAP,ELECT 470uF 20.00% 16V	
		< CONNECTOR >	
* CN300	1-564-778-11	PLUG, CONNECTOR (2.5MM) 4P	
CN301	1-779-280-11	CONNECTOR,FFC(LIF(NON-ZIF))12P	
CN305	1-793-600-11	CONNECTOR, FFC/FPC (ZIF) 17P	
* CN309	1-506-987-11	PIN, CONNECTOR (PC BOARD) 5P	
		< DIODE >	
D310	8-719-073-82	DIODE SFPB-76V	
D311	8-719-073-82	DIODE SFPB-76V	
D312	8-719-073-82	DIODE SFPB-76V	
D313	8-719-073-82	DIODE SFPB-76V	
D314	8-719-073-82	DIODE SFPB-76V	
D315	8-719-073-82	DIODE SFPB-76V	
D320	8-719-073-82	DIODE SFPB-76V	
D321	8-719-073-82	DIODE SFPB-76V	
D322	8-719-073-82	DIODE SFPB-76V	
D323	8-719-073-82	DIODE SFPB-76V	
D324	8-719-073-82	DIODE SFPB-76V	
D325	8-719-073-82	DIODE SFPB-76V	
D330	8-719-073-82	DIODE SFPB-76V	
D331	8-719-073-82	DIODE SFPB-76V	
D332	8-719-073-82	DIODE SFPB-76V	
D333	8-719-073-82	DIODE SFPB-76V	
D334	8-719-073-82	DIODE SFPB-76V	
D335	8-719-073-82	DIODE SFPB-76V	
D340	8-719-073-82	DIODE SFPB-76V	
D341	8-719-073-82	DIODE SFPB-76V	

Ref. No.	Part No.	Description	Remarks
D342	8-719-073-82	DIODE SFPB-76V	
D343	8-719-073-82	DIODE SFPB-76V	
D344	8-719-073-82	DIODE SFPB-76V	
D345	8-719-073-82	DIODE SFPB-76V	
D351	8-719-404-50	DIODE MA111-TX	(S500:US,CND,AEP,CIS,UK,MX,KR/S800)
D370	6-500-060-01	DIODE P6SMB36AT3 (S800)	
D370	6-500-055-01	DIODE P6SMB33AT3 (S500)	
D371	6-500-060-01	DIODE P6SMB36AT3 (S800)	
D371	6-500-055-01	DIODE P6SMB33AT3 (S500)	
D372	6-500-060-01	DIODE P6SMB36AT3 (S800)	
D372	6-500-055-01	DIODE P6SMB33AT3 (S500)	
D373	6-500-060-01	DIODE P6SMB36AT3 (S800)	
D373	6-500-055-01	DIODE P6SMB33AT3 (S500)	
D374	6-500-060-01	DIODE P6SMB36AT3 (S800)	
D374	6-500-055-01	DIODE P6SMB33AT3 (S500)	
D375	6-500-060-01	DIODE P6SMB36AT3 (S800)	
D375	6-500-055-01	DIODE P6SMB33AT3 (S500)	
D380	6-500-060-01	DIODE P6SMB36AT3 (S800)	
D380	6-500-055-01	DIODE P6SMB33AT3 (S500)	
D381	6-500-060-01	DIODE P6SMB36AT3 (S800)	
D381	6-500-055-01	DIODE P6SMB33AT3 (S500)	
D382	6-500-060-01	DIODE P6SMB36AT3 (S800)	
D382	6-500-055-01	DIODE P6SMB33AT3 (S500)	
D383	6-500-060-01	DIODE P6SMB36AT3 (S800)	
D383	6-500-055-01	DIODE P6SMB33AT3 (S500)	
D384	6-500-060-01	DIODE P6SMB36AT3 (S800)	
D384	6-500-055-01	DIODE P6SMB33AT3 (S500)	
D385	6-500-060-01	DIODE P6SMB36AT3 (S800)	
D385	6-500-055-01	DIODE P6SMB33AT3 (S500)	
		< EARTH >	
EB301	1-537-770-11	TERMINAL BOARD, GROUND	
EB302	1-537-770-11	TERMINAL BOARD, GROUND	
		< FERRITE BEAD >	
FB300	1-469-760-21	INDUCTOR 0uH	(S500:US,CND,AEP,CIS,UK,MX,KR/S800)
FB301	1-469-760-21	INDUCTOR 0uH	(S500:US,CND,AEP,CIS,UK,MX,KR/S800)
FB303	1-400-160-51	INDUCTOR 0uH	(S500:US,CND,AEP,CIS,UK,MX,KR/S800)
FB304	1-469-760-21	INDUCTOR 0uH	(S500:US,CND,AEP,CIS,UK,MX,KR/S800)
FB307	1-469-760-21	INDUCTOR 0uH	(S500:US,CND,AEP,CIS,UK,MX,KR/S800)
FB308	1-469-760-21	INDUCTOR 0uH	(S500:US,CND,AEP,CIS,UK,MX,KR/S800)
FB309	1-400-160-51	INDUCTOR 0uH	(S500:US,CND,AEP,CIS,UK,MX,KR/S800)
FB312	1-400-160-51	INDUCTOR 0uH	(S500:US,CND,AEP,CIS,UK,MX,KR/S800)
FB313	1-400-160-51	INDUCTOR 0uH	(S500:US,CND,AEP,CIS,UK,MX,KR/S800)
FB314	1-469-760-21	INDUCTOR 0uH	(S500:US,CND,AEP,CIS,UK,MX,KR/S800)
FB315	1-469-760-21	INDUCTOR 0uH	(S500:US,CND,AEP,CIS,UK,MX,KR/S800)
FB318	1-400-160-51	INDUCTOR 0uH	(S500:US,CND,AEP,CIS,UK,MX,KR/S800)
FB320	1-400-160-51	INDUCTOR 0uH	(S500:US,CND,AEP,CIS,UK,MX,KR/S800)
FB321	1-216-295-11	SHORT 0	
FB322	1-216-295-11	SHORT 0	
FB323	1-216-295-11	SHORT 0	
FB324	1-216-295-11	SHORT 0	
FB325	1-216-295-11	SHORT 0	
FB326	1-216-295-11	SHORT 0	
FB365	1-216-295-11	SHORT 0	
		< IC >	
IC300	8-759-834-29	IC MC74VHC1G04DFT1	
IC301	6-700-277-01	IC CXD9646Z	
IC302	8-759-533-85	IC BA05FP-E2	
IC303	8-759-583-47	IC uPC2933T-E2	
IC304	6-700-277-01	IC CXD9646Z	
IC305	6-700-279-01	IC CXD9634Q	
IC306	6-700-277-01	IC CXD9646Z	
IC307	6-700-277-01	IC CXD9646Z	
IC308	6-700-279-01	IC CXD9634Q	
IC309	6-700-277-01	IC CXD9646Z	
IC310	6-700-279-01	IC CXD9634Q	
IC311	6-700-277-01	IC CXD9646Z	
IC312	8-759-834-30	IC MC74VHC1G08DFT1	
		< JACK >	
J401	1-694-656-11	TERMINAL BOARD (6CH SPEAKER)	
		< COIL >	
L300	1-469-525-91	INDUCTOR 10uH	
L302	1-412-939-11	INDUCTOR 1uH	(S500:US,CND,AEP,CIS,UK,MX,KR/S800)
L302	1-412-940-21	INDUCTOR 1.2uH	(EXCEPT S500:US,CND,AEP,CIS,UK,MX,KR/S800)
L401	1-424-777-11	INDUCTOR 10uH	(EXCEPT S500:AEP,UK,KR)
L402	1-424-777-11	INDUCTOR 10uH	(EXCEPT S500:AEP,UK,KR)
L403	1-424-777-11	INDUCTOR 10uH	(EXCEPT S500:AEP,UK,KR)
L404	1-424-777-11	INDUCTOR 10uH	(EXCEPT S500:AEP,UK,KR)
L405	1-424-777-11	INDUCTOR 10uH	(EXCEPT S500:AEP,UK,KR)
L406	1-424-777-11	INDUCTOR 10uH	(EXCEPT S500:AEP,UK,KR)
		< TRANSISTOR >	
Q301	8-729-119-78	TRANSISTOR 2SC2785TP-HFE	(S500:US,CND,AEP,CIS,UK,MX,KR/S800)
		< RESISTOR >	
R300	1-216-833-11	METAL CHIP 10K 5% 1/16W	
R301	1-216-823-11	METAL CHIP 1.5K 5% 1/16W	
R302	1-216-857-11	METAL CHIP 1M 5% 1/16W	
R303	1-216-833-11	METAL CHIP 10K 5% 1/16W	
R304	1-216-801-11	METAL CHIP 22 5% 1/16W	

Ref. No.	Part No.	Description			Remarks
R305	1-216-801-11	METAL CHIP	22	5%	1/16W
R307	1-216-801-11	METAL CHIP	22	5%	1/16W
R308	1-216-823-11	METAL CHIP	1.5K	5%	1/16W
R309	1-216-823-11	METAL CHIP	1.5K	5%	1/16W
R310	1-216-823-11	METAL CHIP	1.5K	5%	1/16W
R311	1-216-823-11	METAL CHIP	1.5K	5%	1/16W
R312	1-216-823-11	METAL CHIP	1.5K	5%	1/16W
R313	1-216-823-11	METAL CHIP	1.5K	5%	1/16W
R315	1-216-809-11	METAL CHIP	100	5%	1/16W
R316	1-216-809-11	METAL CHIP	100	5%	1/16W
R317	1-216-809-11	METAL CHIP	100	5%	1/16W
R318	1-216-809-11	METAL CHIP	100	5%	1/16W
R319	1-216-809-11	METAL CHIP	100	5%	1/16W
R320	1-216-801-11	METAL CHIP	22	5%	1/16W
R321	1-216-801-11	METAL CHIP	22	5%	1/16W
R322	1-216-803-11	METAL CHIP	33	5%	1/16W
R325	1-216-801-11	METAL CHIP	22	5%	1/16W
R330	1-216-801-11	METAL CHIP	22	5%	1/16W
R333	1-216-801-11	METAL CHIP	22	5%	1/16W
R334	1-216-820-11	METAL CHIP	820	5%	1/16W
R335	1-216-801-11	METAL CHIP	22	5%	1/16W
R336	1-216-820-11	METAL CHIP	820	5%	1/16W
R337	1-216-833-11	METAL CHIP	10K	5%	1/16W
R338	1-216-820-11	METAL CHIP	820	5%	1/16W
R339	1-216-814-11	METAL CHIP	270	5%	1/16W
R340	1-216-814-11	METAL CHIP	270	5%	1/16W
R341	1-216-814-11	METAL CHIP	270	5%	1/16W
R342	1-216-814-11	METAL CHIP	270	5%	1/16W
R343	1-216-801-11	METAL CHIP	22	5%	1/16W
R344	1-216-814-11	METAL CHIP	270	5%	1/16W
R348	1-216-801-11	METAL CHIP	22	5%	1/16W
R349	1-216-801-11	METAL CHIP	22	5%	1/16W
R350	1-216-801-11	METAL CHIP	22	5%	1/16W
R401	1-216-049-11	RES-CHIP	1K	5%	1/10W
R402	1-216-049-11	RES-CHIP	1K	5%	1/10W
R410	1-218-957-11	RES-CHIP	2.2K	5%	1/16W
R412	1-218-957-11	RES-CHIP	2.2K	5%	1/16W
R415	1-216-295-00	SHORT	0		
R420	1-218-957-11	RES-CHIP	2.2K	5%	1/16W
R421	1-218-957-11	RES-CHIP	2.2K	5%	1/16W
R476	1-218-852-11	RES CHIP	1.6K	0.5%	1/10W
R486	1-218-852-11	RES CHIP	1.6K	0.5%	1/10W
		< RELAY >			
RY301	1-515-920-11	RELAY (24V) (S500:US,CND,AEP,CIS,UK,MX,KR/S800)			
RY301	1-755-170-11	RELAY (12V) (EXCEPT S500:US,CND,AEP,CIS,UK,MX,KR/S800)			
RY302	1-515-920-11	RELAY (24V) (S500:US,CND,AEP,CIS,UK,MX,KR/S800)			
RY302	1-755-170-11	RELAY (12V) (EXCEPT S500:US,CND,AEP,CIS,UK,MX,KR/S800)			
RY303	1-515-920-11	RELAY (24V) (S500:US,CND,AEP,CIS,UK,MX,KR/S800)			
RY303	1-755-170-11	RELAY (12V) (EXCEPT S500:US,CND,AEP,CIS,UK,MX,KR/S800)			
		< VIBRATOR >			
X300	1-795-286-21	VIBRATOR, CRYSTAL (49.152MHz)			

****

Ref. No.	Part No.	Description			Remarks
	1-681-990-11	DDCON-1030 BOARD			
		**********			
		< CAPACITOR >			
C820	1-162-970-11	CERAMIC CHIP	0.01uF	10%	25V
C821	1-126-964-11	ELECT	10uF	20.00%	50V
C822	1-164-360-11	CERAMIC CHIP	0.1uF		16V
C823	1-126-964-11	ELECT	10uF	20.00%	50V
C826	1-162-970-11	CERAMIC CHIP	0.01uF	10%	25V
		< CONNECTOR >			
* CN806	1-568-943-11	PIN, CONNECTOR 5P			
		< DIODE >			
D806	8-719-404-50	DIODE MA111-TX			
D807	8-719-404-50	DIODE MA111-TX			
D808	8-719-404-50	DIODE MA111-TX			
D809	8-719-404-50	DIODE MA111-TX			
D810	8-719-069-56	DIODE UDZSTE-176.2B			
		< COIL >			
L801	1-412-959-11	INDUCTOR	47uH		
		< TRANSISTOR >			
Q803	8-729-808-42	TRANSISTOR	2SD1624-T-TD		
Q804	8-729-808-42	TRANSISTOR	2SD1624-T-TD		
		< RESISTOR >			
R850	1-216-828-11	METAL CHIP	3.9K	5%	1/16W
R855	1-216-809-11	METAL CHIP	100	5%	1/16W
R874	1-216-833-11	METAL CHIP	10K	5%	1/16W
		< TRANSFORMER >			
T801	1-437-416-11	TRANSFORMER, DC-DC CONVERTER			

****

Ref. No.	Part No.	Description			Remarks
	A-4726-890-A	DVD BOARD, COMPLETE (S500:HK,TW)			
		**********			
	A-4726-893-A	DVD BOARD, COMPLETE (S500:AR)			
		**********			
	A-4726-897-A	DVD BOARD, COMPLETE (S500:AUS)			
		**********			
	A-4726-901-A	DVD BOARD, COMPLETE (S500:EA)			
		**********			
	A-4726-907-A	DVD BOARD, COMPLETE (S500:MY,SP)			
		**********			
	A-4726-910-A	DVD BOARD, COMPLETE (S500:E12)			
		**********			
	A-4726-942-A	DVD BOARD, COMPLETE (S500:US,CND)			
		**********			
	A-4726-948-A	DVD BOARD, COMPLETE (S500:E32,MX)			
		**********			
	A-4726-952-A	DVD BOARD, COMPLETE (S800:AEP,CIS,UK)			
		**********			
	A-4726-954-A	DVD BOARD, COMPLETE (S500:AEP,UK)			
		**********			
	A-4727-007-A	DVD BOARD, COMPLETE (S500:KR)			
		**********			
	A-4727-399-A	DVD BOARD, COMPLETE (S800:EA)			
		**********			
	A-4727-402-A	DVD BOARD, COMPLETE (S800:HK,TW)			
		**********			
	A-4727-407-A	DVD BOARD, COMPLETE (S800:AUS)			
		**********			
	A-4727-600-A	DVD BOARD, COMPLETE (S800:KR)			
		**********			
	A-4727-603-A	DVD BOARD, COMPLETE (S800:MX)			
		**********			
	A-4727-740-A	DVD BOARD, COMPLETE (S500:CIS)			
		**********			
		< CAPACITOR >			
C001	1-165-798-21	CAP, CHIP ELECT100uF			
C003	1-126-206-11	ELECT CHIP	100uF	20%	6.3V
C004	1-126-204-11	ELECT CHIP	47uF	20%	16V
C005	1-126-246-11	ELECT CHIP	220uF	20%	4V
C006	1-126-204-11	ELECT CHIP	47uF	20%	16V
C007	1-164-850-11	CERAMIC CHIP	10PF		16V
C008	1-107-820-11	CERAMIC CHIP	0.1uF		16V
C009	1-107-820-11	CERAMIC CHIP	0.1uF		16V
C010	1-107-820-11	CERAMIC CHIP	0.1uF		16V
C011	1-107-820-11	CERAMIC CHIP	0.1uF		16V
C012	1-107-820-11	CERAMIC CHIP	0.1uF		16V
C013	1-107-820-11	CERAMIC CHIP	0.1uF		16V
C014	1-107-820-11	CERAMIC CHIP	0.1uF		16V
C015	1-107-820-11	CERAMIC CHIP	0.1uF		16V
C016	1-107-820-11	CERAMIC CHIP	0.1uF		16V
C017	1-107-820-11	CERAMIC CHIP	0.1uF		16V
C018	1-107-820-11	CERAMIC CHIP	0.1uF		16V
C019	1-107-820-11	CERAMIC CHIP	0.1uF		16V
C103	1-164-947-11	CERAMIC CHIP	0.01uF		16V
C104	1-126-209-11	ELECT CHIP	100uF	20.00%	4V
C105	1-164-947-11	CERAMIC CHIP	0.01uF		16V
C106	1-164-947-11	CERAMIC CHIP	0.01uF		16V
C107	1-164-852-11	CERAMIC CHIP	12PF	5.00%	16V
				(S500:AEP,UK,KR)	
C107	1-164-858-11	CERAMIC CHIP	22PF	5.00%	16V
			(EXCEPT S500:AEP,UK,KR)		
C108	1-164-852-11	CERAMIC CHIP	12PF	5.00%	16V
				(S500:AEP,UK,KR)	

Ref. No.	Part No.	Description			Remarks
C108	1-164-858-11	CERAMIC CHIP	22PF	5.00%	16V
			(EXCEPT S500:AEP,UK,KR)		
C109	1-164-947-11	CERAMIC CHIP	0.01uF		16V
C110	1-126-209-11	ELECT CHIP	100uF	20.00%	4V
C111	1-164-947-11	CERAMIC CHIP	0.01uF		16V
C112	1-107-820-11	CERAMIC CHIP	0.1uF		16V
C113	1-164-947-11	CERAMIC CHIP	0.01uF		16V
C114	1-164-947-11	CERAMIC CHIP	0.01uF		16V
C116	1-164-947-11	CERAMIC CHIP	0.01uF		16V
C119	1-164-947-11	CERAMIC CHIP	0.01uF		16V
C124	1-164-947-11	CERAMIC CHIP	0.01uF		16V
C304	1-126-206-11	ELECT CHIP	100uF	20%	6.3V
C305	1-164-947-11	CERAMIC CHIP	0.01uF		16V
C306	1-164-941-11	CERAMIC CHIP	0.0047uF	10.00%	16V
C307	1-164-947-11	CERAMIC CHIP	0.01uF		16V
C309	1-164-941-11	CERAMIC CHIP	0.0047uF	10.00%	16V
C310	1-164-941-11	CERAMIC CHIP	0.0047uF	10.00%	16V
C311	1-164-941-11	CERAMIC CHIP	0.0047uF	10.00%	16V
C312	1-107-820-11	CERAMIC CHIP	0.1uF		16V
C313	1-127-772-11	CERAMIC CHIP	33000PF	10%	10V
C315	1-164-874-11	CERAMIC CHIP	100PF	5.00%	16V
C317	1-164-947-11	CERAMIC CHIP	0.01uF		16V
C318	1-164-947-11	CERAMIC CHIP	0.01uF		16V
C319	1-137-987-81	CERAMIC CHIP	0.068uF	10%	10V
C320	1-164-947-11	CERAMIC CHIP	0.01uF		16V
C321	1-164-947-11	CERAMIC CHIP	0.01uF		16V
C322	1-164-947-11	CERAMIC CHIP	0.01uF		16V
C323	1-164-947-11	CERAMIC CHIP	0.01uF		16V
C324	1-164-947-11	CERAMIC CHIP	0.01uF		16V
C325	1-164-947-11	CERAMIC CHIP	0.01uF		16V
C326	1-164-947-11	CERAMIC CHIP	0.01uF		16V
C327	1-107-820-11	CERAMIC CHIP	0.1uF		16V
C328	1-164-947-11	CERAMIC CHIP	0.01uF		16V
C331	1-164-947-11	CERAMIC CHIP	0.01uF		16V
C332	1-164-947-11	CERAMIC CHIP	0.01uF		16V
C333	1-164-947-11	CERAMIC CHIP	0.01uF		16V
C334	1-164-947-11	CERAMIC CHIP	0.01uF		16V
C335	1-164-947-11	CERAMIC CHIP	0.01uF		16V
C336	1-164-947-11	CERAMIC CHIP	0.01uF		16V
C337	1-164-947-11	CERAMIC CHIP	0.01uF		16V
C338	1-164-947-11	CERAMIC CHIP	0.01uF		16V
C339	1-164-947-11	CERAMIC CHIP	0.01uF		16V
C340	1-164-947-11	CERAMIC CHIP	0.01uF		16V
C341	1-164-947-11	CERAMIC CHIP	0.01uF		16V
C342	1-164-947-11	CERAMIC CHIP	0.01uF		16V
C343	1-164-947-11	CERAMIC CHIP	0.01uF		16V
C344	1-164-947-11	CERAMIC CHIP	0.01uF		16V
C345	1-164-947-11	CERAMIC CHIP	0.01uF		16V
C346	1-164-941-11	CERAMIC CHIP	0.0047uF	10.00%	16V
C347	1-164-947-11	CERAMIC CHIP	0.01uF		16V
C348	1-164-947-11	CERAMIC CHIP	0.01uF		16V
C349	1-164-947-11	CERAMIC CHIP	0.01uF		16V
C350	1-164-947-11	CERAMIC CHIP	0.01uF		16V
C351	1-164-947-11	CERAMIC CHIP	0.01uF		16V
C352	1-126-204-11	ELECT CHIP	47uF	20%	16V
C401	1-127-988-11	CERAMIC CHIP	15000PF	10%	16V
C402	1-164-882-11	CERAMIC CHIP	220PF	5.00%	16V
C403	1-164-874-11	CERAMIC CHIP	100PF	5.00%	16V
C404	1-164-938-11	CERAMIC CHIP	0.0015uF	10.00%	16V
C405	1-107-820-11	CERAMIC CHIP	0.1uF		16V
C406	1-107-820-11	CERAMIC CHIP	0.1uF		16V

Ref. No.	Part No.	Description			Remarks
C407	1-164-882-11	CERAMIC CHIP	220PF	5.00%	16V
C408	1-164-874-11	CERAMIC CHIP	100PF	5.00%	16V
C411	1-164-941-11	CERAMIC CHIP	0.0047uF	10.00%	16V
C412	1-127-772-11	CERAMIC CHIP	33000PF	10%	10V
C413	1-127-772-11	CERAMIC CHIP	33000PF	10%	10V
C414	1-164-947-11	CERAMIC CHIP	0.01uF		16V
C415	1-164-947-11	CERAMIC CHIP	0.01uF		16V
C416	1-164-947-11	CERAMIC CHIP	0.01uF		16V
C417	1-164-947-11	CERAMIC CHIP	0.01uF		16V
C418	1-164-947-11	CERAMIC CHIP	0.01uF		16V
C419	1-126-204-11	ELECT CHIP	47uF	20%	16V
C420	1-107-820-11	CERAMIC CHIP	0.1uF		16V
C421	1-107-820-11	CERAMIC CHIP	0.1uF		16V
C427	1-164-937-11	CERAMIC CHIP	0.001uF	10.00%	16V
C428	1-164-937-11	CERAMIC CHIP	0.001uF	10.00%	16V
C429	1-164-937-11	CERAMIC CHIP	0.001uF	10.00%	16V
		(EXCEPT S500:KR/S800:EA,HK,TW,AUS)			
C430	1-164-937-11	CERAMIC CHIP	0.001uF	10.00%	16V
		(EXCEPT S500:KR/S800:EA,HK,TW,AUS)			
C501	1-126-193-11	ELECT	1uF	20%	50V
C502	1-117-370-11	CERAMIC CHIP	10uF		10V
C504	1-164-947-11	CERAMIC CHIP	0.01uF		16V
C506	1-117-370-11	CERAMIC CHIP	10uF		10V
C508	1-164-947-11	CERAMIC CHIP	0.01uF		16V
C509	1-164-947-11	CERAMIC CHIP	0.01uF		16V
C510	1-164-947-11	CERAMIC CHIP	0.01uF		16V
C511	1-164-947-11	CERAMIC CHIP	0.01uF		16V
C512	1-126-246-11	ELECT CHIP	220uF	20%	4V
C513	1-164-947-11	CERAMIC CHIP	0.01uF		16V
C514	1-164-947-11	CERAMIC CHIP	0.01uF		16V
C516	1-164-947-11	CERAMIC CHIP	0.01uF		16V
C518	1-107-820-11	CERAMIC CHIP	0.1uF		16V
C519	1-164-947-11	CERAMIC CHIP	0.01uF		16V
C520	1-164-947-11	CERAMIC CHIP	0.01uF		16V
C521	1-107-820-11	CERAMIC CHIP	0.1uF		16V
C522	1-164-947-11	CERAMIC CHIP	0.01uF		16V
C523	1-164-947-11	CERAMIC CHIP	0.01uF		16V
C524	1-164-947-11	CERAMIC CHIP	0.01uF		16V
C525	1-164-947-11	CERAMIC CHIP	0.01uF		16V
C526	1-164-947-11	CERAMIC CHIP	0.01uF		16V
C529	1-164-947-11	CERAMIC CHIP	0.01uF		16V
C530	1-164-947-11	CERAMIC CHIP	0.01uF		16V
C531	1-164-947-11	CERAMIC CHIP	0.01uF		16V
C532	1-164-947-11	CERAMIC CHIP	0.01uF		16V
C533	1-164-947-11	CERAMIC CHIP	0.01uF		16V
C534	1-164-947-11	CERAMIC CHIP	0.01uF		16V
C535	1-164-947-11	CERAMIC CHIP	0.01uF		16V
C536	1-164-947-11	CERAMIC CHIP	0.01uF		16V
C537	1-164-947-11	CERAMIC CHIP	0.01uF		16V
C538	1-164-947-11	CERAMIC CHIP	0.01uF		16V
C539	1-164-947-11	CERAMIC CHIP	0.01uF		16V
C540	1-164-947-11	CERAMIC CHIP	0.01uF		16V
C541	1-164-947-11	CERAMIC CHIP	0.01uF		16V
C542	1-164-947-11	CERAMIC CHIP	0.01uF		16V
C545	1-164-947-11	CERAMIC CHIP	0.01uF		16V
C546	1-164-947-11	CERAMIC CHIP	0.01uF		16V
C547	1-164-947-11	CERAMIC CHIP	0.01uF		16V

Ref. No.	Part No.	Description			Remarks
C552	1-107-820-11	CERAMIC CHIP	0.1uF		16V
C600	1-107-820-11	CERAMIC CHIP	0.1uF		16V
C601	1-107-820-11	CERAMIC CHIP	0.1uF		16V
C602	1-117-681-11	ELECT CHIP	100uF	20.00%	16V
C603	1-164-858-11	CERAMIC CHIP	22PF	5.00%	16V
C604	1-164-868-11	CERAMIC CHIP	56PF	5.00%	16V
C605	1-107-820-11	CERAMIC CHIP	0.1uF		16V
C606	1-126-206-11	ELECT CHIP	100uF	20%	6.3V
C607	1-107-820-11	CERAMIC CHIP	0.1uF		16V
C608	1-107-820-11	CERAMIC CHIP	0.1uF		16V
C609	1-107-820-11	CERAMIC CHIP	0.1uF		16V
C610	1-126-205-11	ELECT CHIP	47uF	20%	6.3V
C611	1-164-947-11	CERAMIC CHIP	0.01uF		16V
C612	1-117-370-11	CERAMIC CHIP	10uF		10V
C613	1-117-370-11	CERAMIC CHIP	10uF		10V
C614	1-124-779-00	ELECT CHIP	10uF	20%	16V
C615	1-107-820-11	CERAMIC CHIP	0.1uF		16V
C616	1-107-820-11	CERAMIC CHIP	0.1uF		16V
C617	1-107-820-11	CERAMIC CHIP	0.1uF		16V
C618	1-124-779-00	ELECT CHIP	10uF	20%	16V
C619	1-107-820-11	CERAMIC CHIP	0.1uF		16V
C620	1-107-820-11	CERAMIC CHIP	0.1uF		16V
C621	1-164-935-11	CERAMIC CHIP	470PF	10.00%	16V
C622	1-124-779-00	ELECT CHIP	10uF	20%	16V
C623	1-164-850-11	CERAMIC CHIP	10PF	0.50PF	16V
C624	1-107-820-11	CERAMIC CHIP	0.1uF		16V
C625	1-124-779-00	ELECT CHIP	10uF	20%	16V
C626	1-164-947-11	CERAMIC CHIP	0.01uF		16V
C627	1-164-947-11	CERAMIC CHIP	0.01uF		16V
C628	1-124-779-00	ELECT CHIP	10uF	20%	16V
C629	1-164-935-11	CERAMIC CHIP	470PF	10.00%	16V
C630	1-117-370-11	CERAMIC CHIP	10uF		10V
C631	1-107-820-11	CERAMIC CHIP	0.1uF		16V
C632	1-164-947-11	CERAMIC CHIP	0.01uF		16V
C633	1-107-820-11	CERAMIC CHIP	0.1uF		16V
C634	1-107-820-11	CERAMIC CHIP	0.1uF		16V
C635	1-164-947-11	CERAMIC CHIP	0.01uF		16V
C636	1-107-820-11	CERAMIC CHIP	0.1uF		16V
C637	1-164-947-11	CERAMIC CHIP	0.01uF		16V
C638	1-107-820-11	CERAMIC CHIP	0.1uF		16V
C639	1-107-820-11	CERAMIC CHIP	0.1uF		16V
C640	1-164-947-11	CERAMIC CHIP	0.01uF		16V
C641	1-164-947-11	CERAMIC CHIP	0.01uF		16V
C642	1-164-947-11	CERAMIC CHIP	0.01uF		16V
C643	1-126-205-11	ELECT CHIP	47uF	20%	6.3V
		(S500:KR/S800:EA,HK,TW,AUS)			
C643	1-126-246-11	ELECT CHIP	220uF	20%	4V
		(EXCEPT S500:KR/S800:EA,HK,TW,AUS)			
C644	1-164-947-11	CERAMIC CHIP	0.01uF		16V
C645	1-124-779-00	ELECT CHIP	10uF	20%	16V
C646	1-164-947-11	CERAMIC CHIP	0.01uF		16V
C647	1-164-947-11	CERAMIC CHIP	0.01uF		16V
C648	1-107-820-11	CERAMIC CHIP	0.1uF		16V
C650	1-164-947-11	CERAMIC CHIP	0.01uF		16V
C651	1-164-947-11	CERAMIC CHIP	0.01uF		16V
C652	1-126-209-11	ELECT CHIP	100uF	20.00%	4V
		(EXCEPT S500:KR/S800:EA,HK,TW,AUS)			
C653	1-164-947-11	CERAMIC CHIP	0.01uF		16V

Ref. No.	Part No.	Description			Remarks
C654	1-117-681-11	ELECT CHIP	100uF	20.00%	16V
C656	1-107-820-11	CERAMIC CHIP	0.1uF		16V
C657	1-117-370-11	CERAMIC CHIP	10uF		10V
C658	1-107-820-11	CERAMIC CHIP	0.1uF		16V
C659	1-124-779-00	ELECT CHIP	10uF	20%	16V
C660	1-164-947-11	CERAMIC CHIP	0.01uF		16V
C661	1-164-947-11	CERAMIC CHIP	0.01uF		16V
C662	1-126-205-11	ELECT CHIP	47uF	20%	6.3V
C663	1-107-820-11	CERAMIC CHIP	0.1uF		16V
C664	1-124-779-00	ELECT CHIP	10uF	20%	16V
C665	1-107-820-11	CERAMIC CHIP	0.1uF		16V
C666	1-164-947-11	CERAMIC CHIP	0.01uF		16V
C667	1-117-370-11	CERAMIC CHIP	10uF		10V
C668	1-164-947-11	CERAMIC CHIP	0.01uF		16V
C669	1-164-947-11	CERAMIC CHIP	0.01uF		16V
C670	1-164-947-11	CERAMIC CHIP	0.01uF		16V
C671	1-164-947-11	CERAMIC CHIP	0.01uF		16V
C672	1-164-947-11	CERAMIC CHIP	0.01uF		16V
C673	1-164-947-11	CERAMIC CHIP	0.01uF		16V
C674	1-117-370-11	CERAMIC CHIP	10uF		10V
C675	1-164-947-11	CERAMIC CHIP	0.01uF		16V
C676	1-164-947-11	CERAMIC CHIP	0.01uF		16V
C677	1-164-947-11	CERAMIC CHIP	0.01uF		16V
C679	1-164-947-11	CERAMIC CHIP	0.01uF		16V
C801	1-164-947-11	CERAMIC CHIP	0.01uF		16V
C802	1-164-947-11	CERAMIC CHIP	0.01uF		16V
C804	1-164-947-11	CERAMIC CHIP	0.01uF		16V
C808	1-164-947-11	CERAMIC CHIP	0.01uF		16V
C812	1-126-209-11	ELECT CHIP	100uF	20.00%	4V
C814	1-164-947-11	CERAMIC CHIP	0.01uF		16V
C815	1-164-947-11	CERAMIC CHIP	0.01uF		16V
C816	1-164-947-11	CERAMIC CHIP	0.01uF		16V
C817	1-164-947-11	CERAMIC CHIP	0.01uF		16V
C819	1-164-947-11	CERAMIC CHIP	0.01uF		16V
C820	1-164-947-11	CERAMIC CHIP	0.01uF		16V
C821	1-164-947-11	CERAMIC CHIP	0.01uF		16V
C822	1-164-947-11	CERAMIC CHIP	0.01uF		16V
C823	1-164-947-11	CERAMIC CHIP	0.01uF		16V
C824	1-164-947-11	CERAMIC CHIP	0.01uF		16V
C825	1-164-947-11	CERAMIC CHIP	0.01uF		16V
C826	1-164-947-11	CERAMIC CHIP	0.01uF		16V
C827	1-164-947-11	CERAMIC CHIP	0.01uF		16V
C828	1-164-947-11	CERAMIC CHIP	0.01uF		16V
C829	1-164-947-11	CERAMIC CHIP	0.01uF		16V
C830	1-164-947-11	CERAMIC CHIP	0.01uF		16V
C831	1-164-947-11	CERAMIC CHIP	0.01uF		16V
C832	1-164-947-11	CERAMIC CHIP	0.01uF		16V
C833	1-164-947-11	CERAMIC CHIP	0.01uF		16V
C834	1-107-820-11	CERAMIC CHIP	0.1uF		16V
C835	1-107-820-11	CERAMIC CHIP	0.1uF		16V
C836	1-107-820-11	CERAMIC CHIP	0.1uF		16V
C837	1-117-370-11	CERAMIC CHIP	10uF		10V
C900	1-107-820-11	CERAMIC CHIP	0.1uF		16V
C901	1-164-947-11	CERAMIC CHIP	0.01uF		16V
C902	1-107-820-11	CERAMIC CHIP	0.1uF		16V
C905	1-164-930-11	CERAMIC CHIP	330PF	5.00%	16V
C906	1-164-930-11	CERAMIC CHIP	330PF	5.00%	16V
C907	1-164-937-11	CERAMIC CHIP	0.001uF	10.00%	16V
C908	1-164-937-11	CERAMIC CHIP	0.001uF	10.00%	16V
C909	1-164-222-11	CERAMIC CHIP	0.22uF		25V
C910	1-104-905-11	CAPACITOR	0.22F		5.5V
C911	1-126-205-11	ELECT CHIP	47uF	20%	6.3V
C912	1-126-205-11	ELECT CHIP	47uF	20%	6.3V
C913	1-164-947-11	CERAMIC CHIP	0.01uF		16V
C914	1-164-947-11	CERAMIC CHIP	0.01uF		16V
C915	1-164-937-11	CERAMIC CHIP	0.001uF	10.00%	16V
C917	1-107-820-11	CERAMIC CHIP	0.1uF		16V
C918	1-164-874-11	CERAMIC CHIP	100PF	5.00%	16V
		< CONNECTOR >			
CN001	1-784-371-21	CONNECTOR, FFC/FPC 12P			
CN002	1-778-957-11	CONNECTOR, FFC/FPC 29P			
CN003	1-784-368-21	CONNECTOR, FFC/FPC 9P			
CN004	1-784-376-11	CONNECTOR, FFC/FPC 17P			
CN005	1-784-374-31	CONNECTOR, FFC/FPC 15P			
CN008	1-794-032-21	PIN, CONNECTOR			
CN009	1-784-368-21	CONNECTOR, FFC/FPC 9P			
CN010	1-784-382-21	CONNECTOR, FFC/FPC 25P			
CN101	1-784-367-11	CONNECTOR, FFC/FPC 8P			
CN103	1-793-687-11	PIN, CONNECTOR (1.5MM) (SMD)5P (S500:AEP,UK,KR)			
* CN103	1-573-768-21	PIN, CONNECTOR (1.5MM) (SMD)5P (EXCEPT S500:AEP,UK,KR)			
CN402	1-793-687-11	PIN, CONNECTOR (1.5MM) (SMD)5P (S500:AEP,UK,KR)			
* CN402	1-573-768-21	PIN, CONNECTOR (1.5MM) (SMD)5P (EXCEPT S500:AEP,UK,KR)			
CN404	1-793-687-11	PIN, CONNECTOR (1.5MM) (SMD)5P (S500:AEP,UK,KR)			
* CN404	1-573-768-21	PIN, CONNECTOR (1.5MM) (SMD)5P (EXCEPT S500:AEP,UK,KR)			
CN900	1-784-367-11	CONNECTOR, FFC/FPC 8P			
		< DIODE >			
D900	8-719-053-18	DIODE 1SR154-400TE-25			
D901	8-719-053-18	DIODE 1SR154-400TE-25			
D902	8-719-988-61	DIODE 1SS355TE-17			
D903	8-719-988-61	DIODE 1SS355TE-17			
D904	8-719-988-61	DIODE 1SS355TE-17			
		< FERRITE BEAD >			
FB001	1-469-324-21	FERRITE	0uH		
FB002	1-469-324-21	FERRITE	0uH (S500:KR/S800:EA,HK,TW,AUS)		
FB003	1-469-324-21	FERRITE	0uH		
FB004	1-469-324-21	FERRITE	0uH (S500:KR/S800:EA,HK,TW,AUS)		
FB005	1-469-324-21	FERRITE	0uH		
FB006	1-469-324-21	FERRITE	0uH		
FB007	1-469-324-21	FERRITE	0uH		
FB008	1-469-324-21	FERRITE	0uH		
FB009	1-469-324-21	FERRITE	0uH		
FB010	1-469-324-21	FERRITE	0uH		
FB011	1-469-324-21	FERRITE	0uH		
FB012	1-469-324-21	FERRITE	0uH		
FB013	1-469-324-21	FERRITE	0uH		
FB014	1-469-324-21	FERRITE	0uH		
FB112	1-469-681-21	INDUCTOR	0uH		
FB603	1-469-324-21	FERRITE	0uH		
FB605	1-469-324-21	FERRITE	0uH		
FB901	1-469-324-21	FERRITE	0uH		

Ref. No.	Part No.	Description	Remarks
		< FILTER >	
FL003	1-234-177-11	FILTER, CHIP EMI	
FL004	1-234-177-11	FILTER, CHIP EMI	
FL005	1-233-893-21	FILTER, CHIP EMI	
FL006	1-234-177-11	FILTER, CHIP EMI	
FL101	1-233-893-21	FILTER, CHIP EMI	
FL102	1-233-893-21	FILTER, CHIP EMI	
FL103	1-233-893-21	FILTER, CHIP EMI	
FL501	1-233-893-21	FILTER, CHIP EMI	
FL502	1-233-893-21	FILTER, CHIP EMI	
FL505	1-234-177-11	FILTER, CHIP EMI	
FL603	1-234-177-11	FILTER, CHIP EMI	
FL604	1-234-177-11	FILTER, CHIP EMI	
FL605	1-234-177-11	FILTER, CHIP EMI	
FL606	1-234-177-11	FILTER, CHIP EMI	
FL801	1-233-893-21	FILTER, CHIP EMI	
FL802	1-233-893-21	FILTER, CHIP EMI	
FL803	1-233-893-21	FILTER, CHIP EMI	
		< IC >	
IC001	8-759-460-72	IC BA033FP-E2	
IC002	8-759-052-52	IC NJM78M05DL1A-TE1	
IC003	8-759-052-52	IC NJM78M05DL1A-TE1	
IC004	8-759-533-85	IC BA05FP-E2 (S800:EA,HK,TW,AUS)	
IC004	8-759-473-95	IC uPC2905T-E1 (S500/S800:AEP,CIS,UK)	
IC005	8-759-460-72	IC BA033FP-E2	
IC006	6-700-398-01	IC uPC2918T-E1	
IC101	8-759-640-41	IC BR24C08F-E2	
IC102	8-759-831-81	IC IMIC6001BTD	
IC103	8-759-829-75	IC MB91307APFV-G-BND-E1	
IC106	6-700-785-01	IC SN74AHCT32PWR	
IC107	8-759-826-41	IC MBM29DL324BE-90PFTN	
IC108	6-800-439-01	IC MR27V1602E-P1TPZ	(S500:KR/S800:EA,HK,TW,AUS)
IC302	8-759-828-01	IC CXD9635R	
IC303	8-759-643-10	IC GM71V18160CT-6TR	
IC304	8-759-680-48	IC TC7WH157FK(TE85R)	
IC401	8-759-826-42	IC FAN8034	
IC501	8-759-832-30	IC TK71518ASCL	
IC503	8-752-399-55	IC CXD1932Q	
IC504	8-759-663-74	IC HY57V161610DTC-7TR	
IC505	8-759-663-74	IC HY57V161610DTC-7TR	
IC600	8-759-052-52	IC NJM78M05DL1A-TE1	
IC601	6-701-011-01	IC uPC2910T-E1	
IC602	8-759-560-56	IC PCM1800E/2K	
IC603	8-759-337-40	IC NJM2904V(TE2)	
IC604	8-759-827-81	IC IS61LV6416-15T(T&R)	
IC605	6-700-798-11	IC uPC2926T-1-E1 (S500:KR/S800)	
IC605	8-759-835-63	IC NJM2391DL1-26-TE1	(EXCEPT S500:KR/S800)
IC606	8-759-825-15	IC LC89056W-E	
IC607	8-759-698-76	IC CXD9617R	
IC608	8-759-825-13	IC PCM1748E/2K	
IC610	8-759-337-40	IC NJM2904V(TE2)	
IC612	6-700-278-01	IC CXD9633Q	
IC801	8-752-407-50	IC CXD2752R	
IC802	8-759-585-52	IC SN74AHC1GU04DBVR	

Ref. No.	Part No.	Description	Remarks
IC803	8-759-663-74	IC HY57V161610DTC-7TR	(S500:KR/S800:EA,HK,TW,AUS)
IC803	8-759-832-53	IC W981616AH-7-EL10	(EXCEPT S500:KR/S800)
IC804	8-759-637-50	IC TA48M025F(TE16L)	
IC900	8-759-238-47	IC TC74HCT7007AF(EL)	
IC901	6-800-464-01	IC uPD703033AYGF-M27-3BA	
IC902	8-759-828-32	IC PT8300	
IC903	8-759-427-92	IC PST9126NL	
IC904	8-759-326-78	IC PST9140NL	
		< JUMPER RESISTOR >	
JW900	1-218-941-11	RES-CHIP 100 5% 1/16W	
JW901	1-218-941-11	RES-CHIP 100 5% 1/16W	
JW902	1-218-941-11	RES-CHIP 100 5% 1/16W	
JW903	1-218-990-11	SHORT 0	
		< COIL >	
L600	1-414-754-11	INDUCTOR 10uH	
L601	1-414-754-11	INDUCTOR 10uH	
L602	1-414-754-11	INDUCTOR 10uH	
		< TRANSISTOR >	
Q001	8-729-901-00	TRANSISTOR DTC124EKA-T146	
Q002	8-729-209-74	TRANSISTOR 2SA1213Y-TE12L	
Q900	8-729-027-23	TRANSISTOR DTA114EKA-T146	
Q901	8-729-230-63	TRANSISTOR 2SD1819A-QRS-TX	
Q902	8-729-027-23	TRANSISTOR DTA114EKA-T146	
Q903	8-729-024-91	TRANSISTOR 2SC2712-GL-TE85L	
Q906	8-729-024-91	TRANSISTOR 2SC2712-GL-TE85L	
Q907	8-729-024-91	TRANSISTOR 2SC2712-GL-TE85L	
Q908	8-729-901-00	TRANSISTOR DTC124EK	
Q909	8-729-901-00	TRANSISTOR DTC124EK	
Q910	8-729-901-00	TRANSISTOR DTC124EK	
		< RESISTOR >	
R001	1-218-990-11	SHORT 0	
R002	1-218-990-11	SHORT 0	
R003	1-218-990-11	SHORT 0	
R004	1-218-990-11	SHORT 0	
R005	1-218-990-11	SHORT 0	
R006	1-218-990-11	SHORT 0	
R007	1-218-990-11	SHORT 0	
R008	1-218-990-11	SHORT 0	
R009	1-218-953-11	RES-CHIP 1K 5% 1/16W	
R010	1-218-990-11	SHORT 0	
R011	1-218-953-11	RES-CHIP 1K 5% 1/16W	
R012	1-218-990-11	SHORT 0	
R014	1-218-990-11	SHORT 0	
R016	1-218-990-11	SHORT 0	
R017	1-218-990-11	SHORT 0	
R018	1-218-990-11	SHORT 0	
R019	1-218-990-11	SHORT 0	
R020	1-218-990-11	SHORT 0	
R021	1-218-990-11	SHORT 0	
R022	1-218-990-11	SHORT 0 (S500:AEP,UK,KR/S800)	
R024	1-218-990-11	SHORT 0 (S500:AEP,UK,KR/S800)	
R025	1-218-990-11	SHORT 0	
R026	1-218-990-11	SHORT 0	
R027	1-218-990-11	SHORT 0	
R028	1-218-990-11	SHORT 0	

Ref. No.	Part No.	Description			Remarks
R029	1-218-990-11	SHORT	0		
R030	1-218-990-11	SHORT	0		
R031	1-218-990-11	SHORT	0		
R032	1-218-990-11	SHORT	0		
R033	1-218-990-11	SHORT	0		
R034	1-218-990-11	SHORT	0		
R035	1-218-990-11	SHORT	0		
R036	1-218-990-11	SHORT	0		
R037	1-218-990-11	SHORT	0		
R038	1-218-990-11	SHORT	0		
R039	1-218-990-11	SHORT	0		
R040	1-218-990-11	SHORT	0		
R041	1-218-990-11	SHORT	0		
R042	1-218-990-11	SHORT	0		
R043	1-218-990-11	SHORT	0		
R044	1-218-990-11	SHORT	0		
R045	1-218-990-11	SHORT	0		
R046	1-218-990-11	SHORT	0		
R047	1-218-990-11	SHORT	0		
R048	1-218-990-11	SHORT	0		
R049	1-218-990-11	SHORT	0		
R050	1-218-990-11	SHORT	0		
R051	1-218-990-11	SHORT	0		
R052	1-218-990-11	SHORT	0		
R053	1-218-990-11	SHORT	0		
R055	1-218-990-11	SHORT	0		
R058	1-218-990-11	SHORT	0		
R063	1-218-990-11	SHORT	0		
R065	1-218-990-11	SHORT	0		
R068	1-218-990-11	SHORT	0		
R069	1-218-990-11	SHORT	0		
R070	1-218-990-11	SHORT	0		
R075	1-218-990-11	SHORT	0		
R076	1-218-969-11	RES-CHIP	22K	5%	1/16W
R077	1-218-947-11	RES-CHIP	330	5%	1/16W
R078	1-218-959-11	RES-CHIP	3.3K	5%	1/16W
R079	1-208-643-11	RES-CHIP	22	5%	1/16W
R101	1-216-298-00	METAL CHIP	2.2	5%	1/10W
R105	1-218-965-11	RES-CHIP	10K	5%	1/16W
R106	1-218-965-11	RES-CHIP	10K	5%	1/16W
R107	1-218-990-11	SHORT	0		
R109	1-208-635-11	METAL CHIP	10	0.5%	1/16W
R111	1-218-949-11	RES-CHIP	470	5%	1/16W
R112	1-218-953-11	RES-CHIP	1K	5%	1/16W
R113	1-218-965-11	RES-CHIP	10K	5%	1/16W
R114	1-208-935-11	METAL CHIP	100K	0.5%	1/16W
R116	1-218-965-11	RES-CHIP	10K	5%	1/16W
R117	1-218-953-11	RES-CHIP	1K	5%	1/16W
R118	1-218-953-11	RES-CHIP	1K	5%	1/16W
R119	1-218-965-11	RES-CHIP	10K	5%	1/16W
R121	1-218-965-11	RES-CHIP	10K	5%	1/16W
R122	1-218-965-11	RES-CHIP	10K	5%	1/16W
		(EXCEPT S500:KR/S800:EA,HK,TW,AUS)			
R123	1-218-965-11	RES-CHIP	10K	5%	1/16W
R124	1-208-635-11	METAL CHIP	10	0.5%	1/16W
R125	1-208-635-11	METAL CHIP	10	0.5%	1/16W
R126	1-208-635-11	METAL CHIP	10	0.5%	1/16W
R128	1-218-959-11	RES-CHIP	3.3K	5%	1/16W
R129	1-218-965-11	RES-CHIP	10K	5%	1/16W
R130	1-218-965-11	RES-CHIP	10K	5%	1/16W
R131	1-218-965-11	RES-CHIP	10K	5%	1/16W
R132	1-218-965-11	RES-CHIP	10K	5%	1/16W
R133	1-218-965-11	RES-CHIP	10K	5%	1/16W
R134	1-218-965-11	RES-CHIP	10K	5%	1/16W
R136	1-208-635-11	METAL CHIP	10	0.5%	1/16W
R137	1-208-635-11	METAL CHIP	10	0.5%	1/16W
R138	1-208-635-11	METAL CHIP	10	0.5%	1/16W
R140	1-208-635-11	METAL CHIP	10	0.5%	1/16W
R143	1-218-965-11	RES-CHIP	10K	5%	1/16W
R145	1-218-965-11	RES-CHIP	10K	5%	1/16W
R146	1-218-965-11	RES-CHIP	10K	5%	1/16W
R149	1-218-959-11	RES-CHIP	3.3K	5%	1/16W
			(S500:KR/S800:EA,HK,TW,AUS)		
R149	1-218-961-11	RES-CHIP	4.7K	5%	1/16W
			(EXCEPT S500:KR/S800:EA,HK,TW,AUS)		
R150	1-218-967-11	RES-CHIP	15K	5%	1/16W
			(S500:AEP,UK/S800:AEP,CIS,UK)		
R150	1-218-965-11	RES-CHIP	10K	5%	1/16W
			(S500:KR/S800:EA,HK,TW,AUS)		
R150	1-218-963-11	RES-CHIP	6.8K	5%	1/16W
				(S500:MY,SP,HK,TW)	
R150	1-218-959-11	RES-CHIP	3.3K	5%	1/16W
					(S500:AUS)
R150	1-218-953-11	RES-CHIP	1K	5%	1/16W
					(S500:EA)
R150	1-218-971-11	RES-CHIP	33K	5%	1/16W
				(S500:E32,MX,AR)	
R151	1-218-959-11	RES-CHIP	3.3K	5%	1/16W
			(S500:KR/S800:EA,HK,TW,AUS)		
R151	1-218-961-11	RES-CHIP	4.7K	5%	1/16W
			(EXCEPT S500:KR/S800:EA,HK,TW,AUS)		
R152	1-218-975-11	RES-CHIP	68K	5%	1/16W
				(S800:AEP,CIS,UK)	
R152	1-218-965-11	RES-CHIP	10K	5%	1/16W
			(S500:KR/S800:EA,HK,TW,AUS)		
R153	1-218-959-11	RES-CHIP	3.3K	5%	1/16W
			(S500:KR/S800:EA,HK,TW,AUS)		
R153	1-218-961-11	RES-CHIP	4.7K	5%	1/16W
			(EXCEPT S500:KR/S800:EA,HK,TW,AUS)		
R154	1-218-975-11	RES-CHIP	68K	5%	1/16W
			(S500:AEP,UK,EA/S800:AEP,CIS,UK)		
R154	1-218-971-11	RES-CHIP	33K	5%	1/16W
				(S500:MY,SP,HK,TW)	
R154	1-218-965-11	RES-CHIP	10K	5%	1/16W
			(S500:E12,KR/S800:EA,HK,TW,AUS)		
R154	1-218-967-11	RES-CHIP	15K	5%	1/16W
				(S500:E32,MX,AR,AUS)	
R155	1-218-959-11	RES-CHIP	3.3K	5%	1/16W
			(S500:KR/S800:EA,HK,TW,AUS)		
R155	1-218-961-11	RES-CHIP	4.7K	5%	1/16W
			(EXCEPT S500:KR/S800:EA,HK,TW,AUS)		
R156	1-218-965-11	RES-CHIP	10K	5%	1/16W
R157	1-218-990-11	SHORT	0		
R160	1-218-965-11	RES-CHIP	10K	5%	1/16W
R161	1-218-990-11	SHORT	0		
R162	1-218-965-11	RES-CHIP	10K	5%	1/16W

Ref. No.	Part No.	Description			Remarks
R163	1-218-965-11	RES-CHIP	10K	5%	1/16W
R164	1-218-941-11	RES-CHIP	100	5%	1/16W
R165	1-218-941-11	RES-CHIP	100	5%	1/16W
R166	1-218-961-11	RES-CHIP	4.7K	5%	1/16W
R167	1-218-957-11	RES-CHIP	2.2K	5%	1/16W
		(S500:KR/S800:EA,HK,TW,AUS)			
R167	1-218-953-11	RES-CHIP	1K	5%	1/16W
		(EXCEPT S500:KR/S800:EA,HK,TW,AUS)			
R168	1-218-990-11	SHORT	0		
R170	1-218-953-11	RES-CHIP	1K	5%	1/16W
R172	1-218-965-11	RES-CHIP	10K	5%	1/16W
R174	1-208-635-11	METAL CHIP	10	0.5%	1/16W
R175	1-218-990-11	SHORT	0		
R176	1-208-635-11	METAL CHIP	10	0.5%	1/16W
R177	1-208-635-11	METAL CHIP	10	0.5%	1/16W
R178	1-208-635-11	METAL CHIP	10	0.5%	1/16W
R179	1-208-635-11	METAL CHIP	10	0.5%	1/16W
R182	1-208-935-11	METAL CHIP	100K	0.5%	1/16W
R183	1-218-961-11	RES-CHIP	4.7K	5%	1/16W
R184	1-218-965-11	RES-CHIP	10K	5%	1/16W
R185	1-218-965-11	RES-CHIP	10K	5%	1/16W
R186	1-218-965-11	RES-CHIP	10K	5%	1/16W
R187	1-218-953-11	RES-CHIP	1K	5%	1/16W
		(S500:KR/S800:EA,HK,TW,AUS)			
R187	1-218-957-11	RES-CHIP	2.2K	5%	1/16W
		(EXCEPT S500:KR/S800:EA,HK,TW,AUS)			
R188	1-218-965-11	RES-CHIP	10K	5%	1/16W
R199	1-218-958-11	RES-CHIP	2.7K	5%	1/16W
R299	1-218-979-11	RES-CHIP	150K	5%	1/16W
R301	1-218-959-11	RES-CHIP	3.3K	5%	1/16W
R302	1-218-959-11	RES-CHIP	3.3K	5%	1/16W
R305	1-218-961-11	RES-CHIP	4.7K	5%	1/16W
R306	1-218-961-11	RES-CHIP	4.7K	5%	1/16W
R307	1-218-961-11	RES-CHIP	4.7K	5%	1/16W
R308	1-218-961-11	RES-CHIP	4.7K	5%	1/16W
R309	1-218-961-11	RES-CHIP	4.7K	5%	1/16W
R310	1-218-961-11	RES-CHIP	4.7K	5%	1/16W
R311	1-218-961-11	RES-CHIP	4.7K	5%	1/16W
R312	1-218-961-11	RES-CHIP	4.7K	5%	1/16W
R313	1-218-949-11	RES-CHIP	470	5%	1/16W
R314	1-218-949-11	RES-CHIP	470	5%	1/16W
R315	1-218-949-11	RES-CHIP	470	5%	1/16W
R316	1-218-961-11	RES-CHIP	4.7K	5%	1/16W
R317	1-218-965-11	RES-CHIP	10K	5%	1/16W
R318	1-218-990-11	SHORT	0		
R319	1-218-963-11	RES-CHIP	6.8K	5%	1/16W
R320	1-218-990-11	SHORT	0		
R321	1-218-949-11	RES-CHIP	470	5%	1/16W
R328	1-218-965-11	RES-CHIP	10K	5%	1/16W
R329	1-218-990-11	SHORT	0		
		(S500:KR/S800:EA,HK,TW,AUS)			
R330	1-218-990-11	SHORT	0		
R331	1-208-643-11	RES-CHIP	22	5%	1/16W
R332	1-218-990-11	SHORT	0		
R334	1-208-707-11	METAL CHIP	10K	0.5%	1/16W
R335	1-208-691-11	METAL CHIP	2.2K	0.5%	1/16W
R336	1-218-965-11	RES-CHIP	10K	5%	1/16W
R337	1-218-941-11	RES-CHIP	100	5%	1/16W
R338	1-208-715-11	METAL CHIP	22K	0.5%	1/16W
R341	1-208-707-11	METAL CHIP	10K	0.5%	1/16W

Ref. No.	Part No.	Description			Remarks
R342	1-208-719-11	METAL CHIP	33K	0.5%	1/16W
R343	1-218-945-11	METAL CHIP	220	0.5%	1/16W
R344	1-208-683-11	METAL CHIP	1K	0.5%	1/16W
R345	1-218-965-11	RES-CHIP	10K	5%	1/16W
R349	1-218-970-11	RES-CHIP	27K	5%	1/16W
R350	1-218-954-11	RES-CHIP	1.2K	5%	1/16W
R351	1-218-957-11	RES-CHIP	2.2K	5%	1/16W
R352	1-218-957-11	RES-CHIP	2.2K	5%	1/16W
R356	1-208-689-11	METAL CHIP	1.8K	0.5%	1/16W
R368	1-218-961-11	RES-CHIP	4.7K	5%	1/16W
R384	1-208-635-11	METAL CHIP	10	0.5%	1/16W
R385	1-218-961-11	RES-CHIP	4.7K	5%	1/16W
R402	1-218-965-11	RES-CHIP	10K	5%	1/16W
R403	1-218-965-11	RES-CHIP	10K	5%	1/16W
R404	1-218-953-11	RES-CHIP	1K	5%	1/16W
R405	1-218-953-11	RES-CHIP	1K	5%	1/16W
R406	1-218-978-11	RES-CHIP	120K	5%	1/16W
R407	1-218-978-11	RES-CHIP	120K	5%	1/16W
R408	1-218-979-11	RES-CHIP	150K	5%	1/16W
R409	1-218-979-11	RES-CHIP	150K	5%	1/16W
R410	1-218-974-11	RES-CHIP	56K	5%	1/16W
R411	1-218-974-11	RES-CHIP	56K	5%	1/16W
R412	1-218-982-11	RES-CHIP	270K	5%	1/16W
R413	1-218-965-11	RES-CHIP	10K	5%	1/16W
R414	1-218-985-11	RES-CHIP	470K	5%	1/16W
R415	1-218-978-11	RES-CHIP	120K	5%	1/16W
R416	1-218-987-11	RES-CHIP	680K	5%	1/16W
R417	1-218-965-11	RES-CHIP	10K	5%	1/16W
R418	1-218-971-11	RES-CHIP	33K	5%	1/16W
R419	1-218-971-11	RES-CHIP	33K	5%	1/16W
R420	1-218-985-11	RES-CHIP	470K	5%	1/16W
R421	1-218-971-11	RES-CHIP	33K	5%	1/16W
R422	1-218-971-11	RES-CHIP	33K	5%	1/16W
R423	1-208-719-11	METAL CHIP	33K	0.5%	1/16W
		(EXCEPT S500:KR/S800:EA,HK,TW,AUS)			
R424	1-208-719-11	METAL CHIP	33K	0.5%	1/16W
		(EXCEPT S500:KR/S800:EA,HK,TW,AUS)			
R425	1-208-943-11	METAL CHIP	220K	0.5%	1/16W
		(EXCEPT S500:KR/S800:EA,HK,TW,AUS)			
R426	1-218-985-11	RES-CHIP	470K	5%	1/16W
R427	1-208-935-11	METAL CHIP	100K	0.5%	1/16W
R428	1-218-971-11	RES-CHIP	33K	5%	1/16W
R429	1-218-974-11	METAL CHIP	56K	0.5%	1/16W
R430	1-208-935-11	METAL CHIP	100K	0.5%	1/16W
R431	1-218-974-11	METAL CHIP	56K	0.5%	1/16W
R432	1-218-965-11	RES-CHIP	10K	5%	1/16W
R433	1-218-965-11	RES-CHIP	10K	5%	1/16W
R434	1-218-947-11	RES-CHIP	330	5%	1/16W
R435	1-218-965-11	RES-CHIP	10K	5%	1/16W
R436	1-218-941-11	RES-CHIP	100	5%	1/16W
R439	1-218-990-11	SHORT	0		
R501	1-218-990-11	SHORT	0		
R507	1-218-941-11	RES-CHIP	100	5%	1/16W
R508	1-218-990-11	SHORT	0		
R509	1-218-990-11	SHORT	0		
R510	1-218-965-11	RES-CHIP	10K	5%	1/16W
R511	1-218-945-11	RES-CHIP	220	5%	1/16W
R512	1-218-945-11	RES-CHIP	220	5%	1/16W

Ref. No.	Part No.	Description			Remarks
R513	1-218-945-11	RES-CHIP	220	5%	1/16W
R514	1-218-945-11	RES-CHIP	220	5%	1/16W
R515	1-218-945-11	RES-CHIP	220	5%	1/16W
R516	1-218-945-11	RES-CHIP	220	5%	1/16W
R517	1-218-965-11	RES-CHIP	10K	5%	1/16W
R518	1-218-954-11	RES-CHIP	1.2K	5%	1/16W
R522	1-218-959-11	RES-CHIP	3.3K	5%	1/16W
R524	1-218-965-11	RES-CHIP	10K	5%	1/16W
R525	1-218-965-11	RES-CHIP	10K	5%	1/16W
R532	1-218-965-11	RES-CHIP	10K	5%	1/16W
R533	1-208-635-11	METAL CHIP	10	0.5%	1/16W
R554	1-208-635-11	METAL CHIP	10	0.5%	1/16W
R593	1-218-953-11	RES-CHIP	1K	5%	1/16W
R596	1-218-953-11	RES-CHIP	1K	5%	1/16W
R600	1-218-941-11	RES-CHIP	100	5%	1/16W
R602	1-218-989-11	RES-CHIP	1M	5%	1/16W
R603	1-218-941-11	RES-CHIP	100	5%	1/16W
R604	1-218-941-11	RES-CHIP	100	5%	1/16W
R605	1-218-941-11	RES-CHIP	100	5%	1/16W
R606	1-218-941-11	RES-CHIP	100	5%	1/16W
R607	1-218-941-11	RES-CHIP	100	5%	1/16W
R608	1-218-941-11	RES-CHIP	100	5%	1/16W
R609	1-218-949-11	RES-CHIP	470	5%	1/16W
R610	1-218-957-11	RES-CHIP	2.2K	5%	1/16W
R611	1-218-941-11	RES-CHIP	100	5%	1/16W
R612	1-218-973-11	RES-CHIP	47K	5%	1/16W
R613	1-218-961-11	RES-CHIP	4.7K	5%	1/16W
R614	1-218-971-11	RES-CHIP	33K	5%	1/16W
R615	1-218-961-11	RES-CHIP	4.7K	5%	1/16W
R616	1-218-962-11	RES-CHIP	5.6K	5%	1/16W
R617	1-218-990-11	SHORT	0		
R618	1-218-961-11	RES-CHIP	4.7K	5%	1/16W
R619	1-218-973-11	RES-CHIP	47K	5%	1/16W
R620	1-218-941-11	RES-CHIP	100	5%	1/16W
R621	1-218-941-11	RES-CHIP	100	5%	1/16W
R622	1-218-941-11	RES-CHIP	100	5%	1/16W
R623	1-218-941-11	RES-CHIP	100	5%	1/16W
R624	1-218-941-11	RES-CHIP	100	5%	1/16W
R625	1-218-941-11	RES-CHIP	100	5%	1/16W
R626	1-218-953-11	RES-CHIP	1K	5%	1/16W
R627	1-218-957-11	RES-CHIP	2.2K	5%	1/16W
R628	1-218-941-11	RES-CHIP	100	5%	1/16W
R629	1-218-941-11	RES-CHIP	100	5%	1/16W
R630	1-218-949-11	RES-CHIP	470	5%	1/16W
R631	1-218-941-11	RES-CHIP	100	5%	1/16W
R634	1-218-953-11	RES-CHIP	1K	5%	1/16W
R635	1-218-965-11	RES-CHIP	10K	5%	1/16W
				(S500:AEP,UK,KR)	
R635	1-218-958-11	RES-CHIP	2.7K	5%	1/16W
			(EXCEPT S500:AEP,UK,KR)		
R636	1-218-959-11	RES-CHIP	3.3K	5%	1/16W
R637	1-218-941-11	RES-CHIP	100	5%	1/16W
R639	1-218-941-11	RES-CHIP	100	5%	1/16W
R640	1-218-941-11	RES-CHIP	100	5%	1/16W
R642	1-218-941-11	RES-CHIP	100	5%	1/16W
R644	1-218-961-11	RES-CHIP	4.7K	5%	1/16W
R645	1-218-965-11	RES-CHIP	10K	5%	1/16W

Ref. No.	Part No.	Description			Remarks
R646	1-218-961-11	RES-CHIP	4.7K	5%	1/16W
R647	1-218-941-11	RES-CHIP	100	5%	1/16W
R648	1-218-941-11	RES-CHIP	100	5%	1/16W
R650	1-218-941-11	RES-CHIP	100	5%	1/16W
R651	1-218-961-11	RES-CHIP	4.7K	5%	1/16W
R652	1-218-961-11	RES-CHIP	4.7K	5%	1/16W
R653	1-218-941-11	RES-CHIP	100	5%	1/16W
R654	1-218-941-11	RES-CHIP	100	5%	1/16W
R655	1-218-941-11	RES-CHIP	100	5%	1/16W
R656	1-218-990-11	SHORT	0		
R657	1-218-941-11	RES-CHIP	100	5%	1/16W
R658	1-218-941-11	RES-CHIP	100	5%	1/16W
R659	1-218-935-11	RES-CHIP	33	5%	1/16W
R660	1-218-959-11	RES-CHIP	3.3K	5%	1/16W
R661	1-218-941-11	RES-CHIP	100	5%	1/16W
R662	1-218-941-11	RES-CHIP	100	5%	1/16W
R663	1-218-941-11	RES-CHIP	100	5%	1/16W
R664	1-218-941-11	RES-CHIP	100	5%	1/16W
R665	1-218-965-11	RES-CHIP	10K	5%	1/16W
				(S500:AEP,UK,KR)	
R665	1-218-958-11	RES-CHIP	2.7K	5%	1/16W
			(EXCEPT S500:AEP,UK,KR)		
R666	1-218-941-11	RES-CHIP	100	5%	1/16W
R667	1-218-941-11	RES-CHIP	100	5%	1/16W
R668	1-218-953-11	RES-CHIP	1K	5%	1/16W
R669	1-218-953-11	RES-CHIP	1K	5%	1/16W
R671	1-218-941-11	RES-CHIP	100	5%	1/16W
R672	1-218-941-11	RES-CHIP	100	5%	1/16W
R673	1-218-945-11	RES-CHIP	220	5%	1/16W
R674	1-218-945-11	RES-CHIP	220	5%	1/16W
R675	1-218-945-11	RES-CHIP	220	5%	1/16W
R676	1-218-945-11	RES-CHIP	220	5%	1/16W
R677	1-218-945-11	RES-CHIP	220	5%	1/16W
R679	1-218-941-11	RES-CHIP	100	5%	1/16W
R680	1-218-941-11	RES-CHIP	100	5%	1/16W
R682	1-218-965-11	RES-CHIP	10K	5%	1/16W
R684	1-218-965-11	RES-CHIP	10K	5%	1/16W
R685	1-218-941-11	RES-CHIP	100	5%	1/16W
R686	1-218-965-11	RES-CHIP	10K	5%	1/16W
R687	1-218-953-11	RES-CHIP	1K	5%	1/16W
R688	1-218-965-11	RES-CHIP	10K	5%	1/16W
R689	1-218-965-11	RES-CHIP	10K	5%	1/16W
R692	1-218-941-11	RES-CHIP	100	5%	1/16W
R695	1-218-941-11	RES-CHIP	100	5%	1/16W
R696	1-218-945-11	RES-CHIP	220	5%	1/16W
R699	1-218-941-11	RES-CHIP	100	5%	1/16W
R700	1-218-965-11	RES-CHIP	10K	5%	1/16W
R701	1-218-953-11	RES-CHIP	1K	5%	1/16W
R702	1-218-945-11	RES-CHIP	220	5%	1/16W
R801	1-218-990-11	SHORT	0		
R802	1-218-990-11	SHORT	0		
R803	1-218-990-11	SHORT	0		
R804	1-218-990-11	SHORT	0		
R805	1-218-990-11	SHORT	0		
R806	1-218-990-11	SHORT	0		
R807	1-218-990-11	SHORT	0		
R808	1-218-990-11	SHORT	0		

Ref. No.	Part No.	Description			Remarks
R810	1-218-965-11	RES-CHIP	10K	5%	1/16W
R811	1-218-965-11	RES-CHIP	10K	5%	1/16W
R812	1-218-965-11	RES-CHIP	10K	5%	1/16W
R813	1-218-965-11	RES-CHIP	10K	5%	1/16W
R814	1-218-965-11	RES-CHIP	10K	5%	1/16W
R815	1-218-965-11	RES-CHIP	10K	5%	1/16W
R816	1-218-965-11	RES-CHIP	10K	5%	1/16W
R817	1-218-965-11	RES-CHIP	10K	5%	1/16W
R821	1-218-990-11	SHORT	0		
R823	1-218-965-11	RES-CHIP	10K	5%	1/16W
R824	1-218-990-11	SHORT	0		
R825	1-218-990-11	SHORT	0		
R826	1-208-643-11	RES-CHIP	22	5%	1/16W
R827	1-218-990-11	SHORT	0		
R828	1-218-990-11	SHORT	0		
R829	1-218-990-11	SHORT	0		
R830	1-218-965-11	RES-CHIP	10K	5%	1/16W
R831	1-218-990-11	SHORT	0		
R832	1-218-990-11	SHORT	0		
R833	1-218-990-11	SHORT	0		
R834	1-218-990-11	SHORT	0		
R835	1-218-990-11	SHORT	0		
R836	1-218-990-11	SHORT	0		
R837	1-218-990-11	SHORT	0		
R838	1-218-990-11	SHORT	0		
R839	1-218-990-11	SHORT	0		
R840	1-218-990-11	SHORT	0		
R841	1-218-990-11	SHORT	0		
R842	1-218-990-11	SHORT	0		
R843	1-218-990-11	SHORT	0		
R844	1-218-965-11	RES-CHIP	10K	5%	1/16W
R845	1-218-965-11	RES-CHIP	10K	5%	1/16W
R846	1-218-990-11	SHORT	0		
R847	1-218-990-11	SHORT	0		
R900	1-218-941-11	RES-CHIP	100	5%	1/16W
R901	1-218-941-11	RES-CHIP	100	5%	1/16W
R902	1-218-941-11	RES-CHIP	100	5%	1/16W
R903	1-218-941-11	RES-CHIP	100	5%	1/16W
R904	1-218-941-11	RES-CHIP	100	5%	1/16W
R905	1-218-941-11	RES-CHIP	100	5%	1/16W
R908	1-218-965-11	RES-CHIP	10K	5%	1/16W
R909	1-218-965-11	RES-CHIP	10K	5%	1/16W
R910	1-218-941-11	RES-CHIP	100	5%	1/16W
R911	1-218-941-11	RES-CHIP	100	5%	1/16W
R912	1-218-941-11	RES-CHIP	100	5%	1/16W
R913	1-218-941-11	RES-CHIP	100	5%	1/16W
R914	1-218-941-11	RES-CHIP	100	5%	1/16W
R915	1-218-941-11	RES-CHIP	100	5%	1/16W
R916	1-218-941-11	RES-CHIP	100	5%	1/16W
R919	1-218-965-11	RES-CHIP	10K	5%	1/16W
R920	1-218-941-11	RES-CHIP	100	5%	1/16W
R921	1-218-941-11	RES-CHIP	100	5%	1/16W
R922	1-218-961-11	RES-CHIP	4.7K	5%	1/16W
R924	1-218-965-11	RES-CHIP	10K	5%	1/16W
R928	1-218-941-11	RES-CHIP	100	5%	1/16W
R929	1-218-989-11	RES-CHIP	1M	5%	1/16W

Ref. No.	Part No.	Description			Remarks
R930	1-218-965-11	RES-CHIP	10K	5%	1/16W
R931	1-218-945-11	RES-CHIP	220	5%	1/16W
R932	1-218-965-11	RES-CHIP	10K	5%	1/16W
R934	1-218-965-11	RES-CHIP	10K	5%	1/16W
R935	1-218-965-11	RES-CHIP	10K	5%	1/16W (S500:E12,EA,HK,TW,AUS)
R936	1-218-965-11	RES-CHIP	10K	5%	1/16W (S500:US,CND,AEP,UK,E32,KR,MX,AR/S800)
R937	1-218-965-11	RES-CHIP	10K	5%	1/16W (S500:AEP,UK,E32,EA,MY,SP, MX,AR/S800:AEP,CIS,UK)
R938	1-218-965-11	RES-CHIP	10K	5%	1/16W (S500:US,CND,E12,MY,SP,HK,TW, KR,AUS/S800:EA,HK,TW,AUS)
R939	1-218-965-11	RES-CHIP	10K	5%	1/16W (S500:E12,E32,HK,TW,MX,AR)
R940	1-218-965-11	RES-CHIP	10K	5%	1/16W (S500:US,CND,AEP,UK,EA,KR,AUS/S800)
R941	1-218-965-11	RES-CHIP	10K	5%	1/16W
R942	1-218-965-11	RES-CHIP	10K	5%	1/16W
R943	1-218-965-11	RES-CHIP	10K	5%	1/16W
R944	1-218-965-11	RES-CHIP	10K	5%	1/16W
R945	1-218-965-11	RES-CHIP	10K	5%	1/16W
R946	1-218-965-11	RES-CHIP	10K	5%	1/16W
R947	1-218-965-11	RES-CHIP	10K	5%	1/16W
R948	1-218-965-11	RES-CHIP	10K	5%	1/16W
R949	1-218-965-11	RES-CHIP	10K	5%	1/16W
R950	1-218-973-11	RES-CHIP	47K	5%	1/16W
R952	1-218-965-11	RES-CHIP	10K	5%	1/16W
R953	1-218-965-11	RES-CHIP	10K	5%	1/16W
R954	1-218-965-11	RES-CHIP	10K	5%	1/16W
R955	1-218-965-11	RES-CHIP	10K	5%	1/16W
R956	1-218-965-11	RES-CHIP	10K	5%	1/16W
R957	1-218-965-11	RES-CHIP	10K	5%	1/16W
R959	1-218-953-11	RES-CHIP	1K	5%	1/16W
R960	1-218-965-11	RES-CHIP	10K	5%	1/16W
R961	1-218-965-11	RES-CHIP	10K	5%	1/16W
R962	1-218-965-11	RES-CHIP	10K	5%	1/16W
R963	1-218-965-11	RES-CHIP	10K	5%	1/16W
R964	1-218-973-11	RES-CHIP	47K	5%	1/16W
R965	1-218-965-11	RES-CHIP	10K	5%	1/16W
R967	1-218-941-11	RES-CHIP	100	5%	1/16W
R968	1-218-941-11	RES-CHIP	100	5%	1/16W
R969	1-218-941-11	RES-CHIP	100	5%	1/16W
R970	1-218-941-11	RES-CHIP	100	5%	1/16W
R971	1-218-941-11	RES-CHIP	100	5%	1/16W
R972	1-218-965-11	RES-CHIP	10K	5%	1/16W
R974	1-218-990-11	SHORT	0		
R977	1-218-965-11	RES-CHIP	10K	5%	1/16W (S800:AEP,CIS,UK)
R978	1-218-965-11	RES-CHIP	10K	5%	1/16W (EXCEPT S500:KR/S800)
R980	1-218-965-11	RES-CHIP	10K	5%	1/16W (EXCEPT S500:KR/S800:EA,HK,TW,AUS)
R982	1-218-965-11	RES-CHIP	10K	5%	1/16W (EXCEPT S500:KR/S800:EA,HK,TW,AUS)
R983	1-218-965-11	RES-CHIP	10K	5%	1/16W

Ref. No.	Part No.	Description			Remarks
R984	1-218-965-11	RES-CHIP	10K	5%	1/16W
R985	1-218-985-11	RES-CHIP	470K	5%	1/16W
R986	1-218-973-11	RES-CHIP	47K	5%	1/16W
R987	1-218-973-11	RES-CHIP	47K	5%	1/16W
R988	1-218-990-11	SHORT	0		
R989	1-218-990-11	SHORT	0		
R990	1-218-965-11	RES-CHIP	10K	5%	1/16W
R991	1-218-965-11	RES-CHIP	10K	5%	1/16W
R992	1-218-965-11	RES-CHIP	10K	5%	1/16W
		< VARIABLE RESISTOR >			
RV501	1-223-583-11	RES, ADJ, CARBON 1K			
		< VIBRATOR >			
X101	1-795-174-11	VIBRATOR, CERAMIC (16.5MHz)			
X102	1-781-867-21	VIBRATOR, CRYSTAL (27MHz) (S800:EA,HK,TW,AUS)			
X102	1-767-519-11	VIBRATOR, CRYSTAL (29MHz) (S500/S800:AEP,CIS,UK)			
X600	1-795-126-11	VIBRATOR, CRYSTAL (12.288MHz)			
X601	1-795-363-21	VIBRATOR, CERAMIC (13.5MHz)			
X901	1-767-922-11	VIBRATOR, CERAMIC (16MHz)			

****

	A-4726-419-A	FP-1030 BOARD, COMPLETE			
		**********			
	4-234-908-01	HOLDER (FL) (EXCEPT S500:AEP,UK,KR)			
		< CAPACITOR >			
C812	1-126-153-11	ELECT	22uF	20%	6.3V (EXCEPT S500:AEP,UK,KR)
C812	1-126-514-11	ELECT	22uF	20.00%	6.3V (S500:AEP,UK,KR)
C813	1-164-360-11	CERAMIC CHIP	0.1uF		16V
C814	1-162-964-11	CERAMIC CHIP	0.001uF	10%	50V
C815	1-162-964-11	CERAMIC CHIP	0.001uF	10%	50V
C816	1-162-964-11	CERAMIC CHIP	0.001uF	10%	50V
C817	1-162-964-11	CERAMIC CHIP	0.001uF	10%	50V
C818	1-162-923-11	CERAMIC CHIP	47PF	5%	50V
C819	1-164-360-11	CERAMIC CHIP	0.1uF		16V
		< CONNECTOR >			
CN801	1-785-414-11	CONNECTOR, FFC/FPC 15P			
CN802	1-506-481-11	PIN, CONNECTOR 2P			
CN804	1-568-955-11	PIN, CONNECTOR 6P			
* CN813	1-568-941-11	PIN, CONNECTOR 3P			
		< FERRITE BEAD >			
FB800	1-414-813-11	FERRITE	0uH		
FB801	1-414-813-11	FERRITE	0uH		
FB802	1-414-813-11	FERRITE	0uH		
		< FILTER >			
FL801	1-518-767-21	INDICATOR TUBE, FLUORESCENT			
		< IC >			
IC802	6-700-112-01	IC MSM9202-05GS-KDR1			
		< TRANSISTOR >			
Q801	8-729-602-36	TRANSISTOR	2SA1602TP-1EF		
		< RESISTOR >			
R805	1-216-829-11	METAL CHIP	4.7K	5%	1/16W
R838	1-216-805-11	METAL CHIP	47	5%	1/16W
R840	1-216-827-11	METAL CHIP	3.3K	5%	1/16W
R841	1-216-809-11	METAL CHIP	100	5%	1/16W
R842	1-216-809-11	METAL CHIP	100	5%	1/16W
R843	1-216-809-11	METAL CHIP	100	5%	1/16W

****

	1-681-991-11	FU-1030 BOARD			
		**********			
		< CAPACITOR >			
C800	1-162-970-11	CERAMIC CHIP	0.01uF	10%	25V
C801	1-162-970-11	CERAMIC CHIP	0.01uF	10%	25V
		< RESISTOR >			
R809	1-216-827-11	METAL CHIP	3.3K	5%	1/16W
R837	1-216-821-11	METAL CHIP	1K	5%	1/16W
R844	1-216-823-11	METAL CHIP	1.5K	5%	1/16W
R849	1-216-824-11	METAL CHIP	1.8K	5%	1/16W
R860	1-216-826-11	METAL CHIP	2.7K	5%	1/16W
R864	1-216-841-11	METAL CHIP	47K	5%	1/16W (S500:AEP,UK,KR)
R864	1-216-829-11	METAL CHIP	4.7K	5%	1/16W (EXCEPT S500:AEP,UK,KR)
R873	1-216-809-11	METAL CHIP	100	5%	1/16W
		< SWITCH >			
S800	1-418-632-11	ENCODER, ROTARY (VOLUME)			
S821	1-762-875-21	SWITCH, KEYBOARD (SOUND FIELD +)			
S822	1-762-875-21	SWITCH, KEYBOARD (SOUND FIELD -)			
S823	1-762-875-21	SWITCH, KEYBOARD (DISPLAY)			
S824	1-762-875-21	SWITCH, KEYBOARD (BAND)			
S825	1-762-875-21	SWITCH, KEYBOARD (FUNCTION)			

****

	1-681-996-11	HP-1030 BOARD			
		**********			
		< CAPACITOR >			
C900	1-124-234-00	ELECT	22uF	20%	16V
C901	1-124-234-00	ELECT	22uF	20%	16V
C902	1-163-011-11	CERAMIC CHIP	0.0015uF	10%	50V
C903	1-127-715-11	CERAMIC CHIP	0.22uF	10%	16V
C904	1-127-715-11	CERAMIC CHIP	0.22uF	10%	16V
		< JACK >			
J900	1-566-891-21	JACK (PHONES)			
		< COIL >			
L900	1-410-387-11	INDUCTOR CHIP	33uH		
L901	1-410-387-11	INDUCTOR CHIP	33uH		

Ref. No.	Part No.	Description				Remarks
		< TRANSISTOR >				
Q900	8-729-046-97	TRANSISTOR	2SD1938(F)-T(TX).SO			
Q901	8-729-046-97	TRANSISTOR	2SD1938(F)-T(TX).SO			
		< RESISTOR >				
R900	1-216-833-11	METAL CHIP	10K	5%	1/16W	
R901	1-216-821-11	METAL CHIP	1K	5%	1/16W	
R902	1-216-833-11	METAL CHIP	10K	5%	1/16W	
R903	1-216-821-11	METAL CHIP	1K	5%	1/16W	
R905	1-216-821-11	METAL CHIP	1K	5%	1/16W	
R906	1-216-821-11	METAL CHIP	1K	5%	1/16W	
**********						
	A-4726-402-A	I/O BOARD, COMPLETE				(EXCEPT S500:AEP,CIS,UK/S800)
		**********				
	A-4726-592-A	I/O BOARD, COMPLETE (S500:CIS/S800)				
		**********				
	A-4726-827-A	I/O BOARD, COMPLETE (S500:AEP,UK)				
		**********				
		< CAPACITOR >				
C600	1-126-956-11	ELECT	0.1uF	20.00%	50V	(S500:AEP,UK)
C600	1-128-551-11	ELECT	22uF	20.00%	25V	(EXCEPT S500:AEP,UK)
C601	1-126-956-11	ELECT	0.1uF	20.00%	50V	(S500:AEP,UK)
C601	1-128-551-11	ELECT	22uF	20.00%	25V	(EXCEPT S500:AEP,UK)
C602	1-126-933-11	ELECT	100uF	20.00%	16V	
C603	1-126-960-11	ELECT	1uF	20.00%	50V	
C604	1-126-960-11	ELECT	1uF	20.00%	50V	
C605	1-163-038-00	CERAMIC CHIP	0.1uF		25V	(S500:AEP,UK)
C605	1-164-156-11	CERAMIC CHIP	0.1uF		25V	(EXCEPT S500:AEP,UK)
C606	1-163-038-00	CERAMIC CHIP	0.1uF		25V	(S500:AEP,UK)
C606	1-164-156-11	CERAMIC CHIP	0.1uF		25V	(EXCEPT S500:KR)
C608	1-163-023-00	CERAMIC CHIP	0.015uF	5%	50V	(S500:AEP,UK,)
C608	1-164-227-11	CERAMIC CHIP	0.022uF	10%	25V	(EXCEPT S500:AEP,UK)
C609	1-163-023-00	CERAMIC CHIP	0.015uF	5%	50V	(S500:AEP,UK)
C609	1-164-227-11	CERAMIC CHIP	0.022uF	10%	25V	(EXCEPT S500:AEP,UK)
C610	1-126-956-11	ELECT	0.1uF	20.00%	50V	(S500:AEP,UK)
C610	1-128-551-11	ELECT	22uF	20.00%	25V	(EXCEPT S500:AEP,UK)
C611	1-126-956-11	ELECT	0.1uF	20.00%	50V	(S500:AEP,UK)
C611	1-128-551-11	ELECT	22uF	20.00%	25V	(EXCEPT S500:AEP,UK)
C612	1-126-933-11	ELECT	100uF	20.00%	16V	(S500:AEP,UK)
C613	1-126-956-11	ELECT	0.1uF	20.00%	50V	(S500:AEP,UK)
C613	1-128-551-11	ELECT	22uF	20.00%	25V	(EXCEPT S500:AEP,UK)
C614	1-163-038-00	CERAMIC CHIP	0.1uF		25V	(S500:AEP,UK)
C614	1-164-156-11	CERAMIC CHIP	0.1uF		25V	(EXCEPT S500:AEP,UK)
C615	1-126-956-11	ELECT	0.1uF	20.00%	50V	(S500:AEP,UK)
C615	1-128-551-11	ELECT	22uF	20.00%	25V	(EXCEPT S500:AEP,UK)
C616	1-126-956-11	ELECT	0.1uF	20.00%	50V	(S500:AEP,UK)
C616	1-128-551-11	ELECT	22uF	20.00%	25V	(EXCEPT S500:AEP,UK)
C617	1-163-038-00	CERAMIC CHIP	0.1uF		25V	(S500:AEP,UK)
C617	1-164-156-11	CERAMIC CHIP	0.1uF		25V	(EXCEPT S500:AEP,UK)
C618	1-126-956-11	ELECT	0.1uF	20.00%	50V	(S500:AEP,UK)
C618	1-128-551-11	ELECT	22uF	20.00%	25V	(EXCEPT S500:AEP,UK)
C619	1-126-956-11	ELECT	0.1uF	20.00%	50V	(S500:AEP,UK)
C619	1-128-551-11	ELECT	22uF	20.00%	25V	(EXCEPT S500:AEP,UK)
C620	1-126-956-11	ELECT	0.1uF	20.00%	50V	(S500:AEP,UK)
C620	1-128-551-11	ELECT	22uF	20.00%	25V	(EXCEPT S500:AEP,UK)
C621	1-162-960-11	CERAMIC CHIP	220PF	10%	50V	(EXCEPT S500:AEP,UK)
C621	1-163-001-11	CERAMIC CHIP	220PF	10%	50V	(S500:AEP,UK)
C622	1-126-956-11	ELECT	0.1uF	20.00%	50V	(S500:AEP,UK)
C622	1-128-551-11	ELECT	22uF	20.00%	25V	(EXCEPT S500:AEP,UK)
C623	1-162-960-11	CERAMIC CHIP	220PF	10%	50V	(EXCEPT S500:AEP,UK)
C623	1-163-001-11	CERAMIC CHIP	220PF	10%	50V	(S500:AEP,UK)
C624	1-126-956-11	ELECT	0.1uF	20.00%	50V	(S500:AEP,UK)
C624	1-128-551-11	ELECT	22uF	20.00%	25V	(EXCEPT S500:AEP,UK)
C625	1-162-960-11	CERAMIC CHIP	220PF	10%	50V	(EXCEPT S500:AEP,UK)
C625	1-163-001-11	CERAMIC CHIP	220PF	10%	50V	(S500:AEP,UK)
C626	1-128-551-11	ELECT	22uF	20.00%	25V	(EXCEPT S500:AEP,UK)
C626	1-126-956-11	ELECT	0.1uF	20.00%	50V	(S500:AEP,UK)
C627	1-162-960-11	CERAMIC CHIP	220PF	10%	50V	(EXCEPT S500:AEP,UK)
C627	1-163-001-11	CERAMIC CHIP	220PF	10%	50V	(S500:AEP,UK)

I/O

Ref. No.	Part No.	Description	Remarks
C628	1-126-933-11	ELECT 100uF 20.00% 16V	
C630	1-163-038-00	CERAMIC CHIP 0.1uF 25V	(S500:AEP,UK)
C630	1-164-156-11	CERAMIC CHIP 0.1uF 25V	(EXCEPT S500:AEP,UK)
C631	1-126-956-11	ELECT 0.1uF 20.00% 50V	(S500:AEP,UK)
C631	1-128-551-11	ELECT 22uF 20.00% 25V	(EXCEPT S500:AEP,UK)
C632	1-163-038-00	CERAMIC CHIP 0.1uF 25V	(S500:AEP,UK)
C632	1-164-156-11	CERAMIC CHIP 0.1uF 25V	(EXCEPT S500:AEP,UK)
C633	1-163-038-00	CERAMIC CHIP 0.1uF 25V	(S500:AEP,UK)
C633	1-164-156-11	CERAMIC CHIP 0.1uF 25V	(EXCEPT S500:AEP,UK)
C635	1-164-156-11	CERAMIC CHIP 0.1uF 25V	(S500:AEP,CIS,UK/S800)
C636	1-126-947-11	ELECT 47uF 20.00% 16V	(S500:AEP,CIS,UK/S800)
C637	1-162-959-11	CERAMIC CHIP 330PF 5% 50V	(S500:AEP,CIS,UK/S800)
C638	1-162-970-11	CERAMIC CHIP 0.01uF 10% 25V	(S500:AEP,CIS,UK/S800)
C639	1-164-185-11	CERAMIC CHIP 13PF 5.00% 50V	(S500:AEP,CIS,UK/S800)
C640	1-164-185-11	CERAMIC CHIP 13PF 5.00% 50V	(S500:AEP,CIS,UK/S800)
C641	1-164-739-11	CERAMIC CHIP 560PF 5.00% 50V	(S500:AEP,CIS,UK/S800)
C642	1-126-963-11	ELECT 4.7uF 20.00% 50V	(S500:AEP,CIS,UK/S800)
C700	1-163-227-11	CERAMIC CHIP 10PF 0.50PF 50V	(S500:AEP,UK)
C700	1-162-918-11	CERAMIC CHIP 18PF 5.00% 50V	(EXCEPT S500:AEP,UK)
C701	1-163-227-11	CERAMIC CHIP 10PF 0.50PF 50V	(S500:AEP,UK)
C701	1-162-921-11	CERAMIC CHIP 33PF 5% 50V	(EXCEPT S500:AEP,UK)
C705	1-163-227-11	CERAMIC CHIP 10PF 0.50PF 50V	(S500:AEP,UK)
C705	1-162-918-11	CERAMIC CHIP 18PF 5.00% 50V	(EXCEPT S500:AEP,UK)
C706	1-163-227-11	CERAMIC CHIP 10PF 0.50PF 50V	(S500:AEP,UK)
C706	1-162-921-11	CERAMIC CHIP 33PF 5% 50V	(EXCEPT S500:AEP,UK)
C707	1-126-964-11	ELECT 10uF 20.00% 50V	
C708	1-126-933-11	ELECT 100uF 20.00% 16V	
C712	1-163-227-11	CERAMIC CHIP 10PF 0.50PF 50V	(S500:AEP,UK)
C712	1-162-918-11	CERAMIC CHIP 18PF 5.00% 50V	(EXCEPT S500:AEP,UK)
C713	1-163-227-11	CERAMIC CHIP 10PF 0.50PF 50V	(S500:AEP,UK)
C713	1-162-921-11	CERAMIC CHIP 33PF 5% 50V	(EXCEPT S500:AEP,UK)
C717	1-126-964-11	ELECT 10uF 20.00% 50V	
C718	1-163-038-00	CERAMIC CHIP 0.1uF 25V	(S500:AEP,UK)
C718	1-164-156-11	CERAMIC CHIP 0.1uF 25V	(EXCEPT S500:AEP,UK)
C719	1-126-964-11	ELECT 10uF 20.00% 50V	
C720	1-163-038-00	CERAMIC CHIP 0.1uF 25V	(S500:AEP,UK)
C720	1-164-156-11	CERAMIC CHIP 0.1uF 25V	(EXCEPT S500:AEP,UK)
C721	1-124-261-00	ELECT 10uF 20% 50V	
C722	1-126-964-11	ELECT 10uF 20.00% 50V	
C723	1-126-964-11	ELECT 10uF 20.00% 50V	(S500:AEP,UK)
C723	1-124-261-00	ELECT 10uF 20% 50V	(EXCEPT S500:AEP,UK)
C724	1-125-972-11	ELECT 100uF 20.00% 16V	
C725	1-124-234-00	ELECT 22uF 20% 16V	
C726	1-125-972-11	ELECT 100uF 20.00% 16V	
C727	1-163-038-00	CERAMIC CHIP 0.1uF 25V	(S500:AEP,UK)
C727	1-164-156-11	CERAMIC CHIP 0.1uF 25V	(EXCEPT S500:AEP,UK)
C728	1-163-038-00	CERAMIC CHIP 0.1uF 25V	(S500:AEP,UK)
C728	1-164-156-11	CERAMIC CHIP 0.1uF 25V	(EXCEPT S500:AEP,UK)
C729	1-124-234-00	ELECT 22uF 20% 16V	
C730	1-125-972-11	ELECT 100uF 20.00% 16V	
C731	1-163-038-00	CERAMIC CHIP 0.1uF 25V	(S500:AEP,UK)
C731	1-164-156-11	CERAMIC CHIP 0.1uF 25V	(EXCEPT S500:AEP,UK)
C732	1-125-972-11	ELECT 100uF 20.00% 16V	
C733	1-163-038-00	CERAMIC CHIP 0.1uF 25V	(S500:AEP,UK)
C733	1-164-156-11	CERAMIC CHIP 0.1uF 25V	(EXCEPT S500:AEP,UK)
C734	1-124-234-00	ELECT 22uF 20% 16V	
C735	1-163-038-00	CERAMIC CHIP 0.1uF 25V	(S500:AEP,UK)
C735	1-164-156-11	CERAMIC CHIP 0.1uF 25V	(EXCEPT S500:AEP,UK)
C736	1-124-261-00	ELECT 10uF 20% 50V	
C737	1-124-261-00	ELECT 10uF 20% 50V	
C738	1-163-038-00	CERAMIC CHIP 0.1uF 25V	(S500:AEP,UK)
C738	1-164-156-11	CERAMIC CHIP 0.1uF 25V	(EXCEPT S500:AEP,UK)
C739	1-216-295-00	SHORT 0	(S500:AEP,UK,KR)
C739	1-216-864-11	METAL CHIP 0 5% 1/16W	(EXCEPT S500:AEP,UK)
C740	1-163-038-91	CERAMIC CHIP 0.1uF 25V	(S500:AEP,UK)
C740	1-164-156-00	CERAMIC CHIP 0.1uF 25V	(EXCEPT S500:AEP,UK)
C741	1-163-038-00	CERAMIC CHIP 0.1uF 25V	(S500:AEP,UK)
C741	1-164-156-11	CERAMIC CHIP 0.1uF 25V	(EXCEPT S500:AEP,UK)
C802	1-162-965-11	CERAMIC CHIP 0.0015uF 10% 50V	(EXCEPT S500:AEP,UK)
C803	1-162-965-11	CERAMIC CHIP 0.0015uF 10% 50V	(EXCEPT S500:AEP,UK)

Ref. No.	Part No.	Description	Remarks
		< CONNECTOR >	
* CN600	1-569-930-11	SOCKET, CONNECTOR 13P (S500:AEP,UK)	
CN600	1-794-431-11	CONNECTOR, FFC/FPC 13P	(EXCEPT S500:AEP,UK)
CN601	1-779-566-11	CONNECTOR,FFC(LIF(NON-ZIF))29P	(S500:AEP,UK)
CN601	1-779-297-11	CONNECTOR,FFC(LIF(NON-ZIF))29P	(EXCEPT S500:AEP,UK)
CN700	1-779-277-11	CONNECTOR, FFC(LIF(NON-ZIF))9P	
		< DIODE >	
D601	8-719-056-85	DIODE UDZSTE-178.2B	
D602	8-719-056-78	DIODE UDZ-TE-17-4.3B	(S500:AEP,CIS,UK/S800)
		< IC >	
IC600	8-759-385-76	IC MC14052 BDR2	
IC601	8-759-646-52	IC KIA7805AP (EXCEPT S500:AEP,UK)	
IC601	8-759-701-56	IC NJM78M05FA (EXCEPT S500:AEP,UK)	
IC602	8-749-923-05	TORX178B (VIDEO2/OPTICAL DIGITAL IN)	
IC603	8-749-923-04	IC TOTX178A (DIGITAL OUT/OPTICAL)	
IC604	8-759-557-36	IC BU1924F-E2 (S500:AEP,CIS,UK/S800)	
IC700	8-759-696-10	IC NJM2235V(TE2)	
IC701	8-759-680-28	IC BA7666FS-E2	
IC702	8-759-284-49	IC NJM2285V-TE2	
		< JACK >	
J600	1-815-747-11	JACK, PIN 9P (VIDEO AUDIO IN/OUT VIDEO IN/OUT/VIDEO2 AUDIO IN VIDEO IN)	
J700	1-815-748-11	JACK, PIN 2P (MONITOR OUT/S VIDEO/VIDEO)	
		< COIL >	
L600	1-216-295-00	SHORT 0	
L601	1-469-525-91	INDUCTOR 10uH	
L700	1-412-939-11	INDUCTOR 1uH (S500:AEP,UK)	
L700	1-412-953-11	INDUCTOR 15uH (EXCEPT S500:AEP,UK)	
L702	1-469-525-91	INDUCTOR 10uH	
L703	1-412-939-11	INDUCTOR 1uH (S500:AEP,UK)	
L703	1-412-953-11	INDUCTOR 15uH (EXCEPT S500:AEP,UK)	
L705	1-412-939-11	INDUCTOR 1uH (S500:AEP,UK)	
L705	1-412-953-11	INDUCTOR 15uH (EXCEPT S500:AEP,UK)	
L707	1-469-525-91	INDUCTOR 10uH	
		< TRANSISTOR >	
Q600	8-729-801-93	TRANSISTOR 2SD1387-34-TP	
Q601	8-729-027-23	TRANSISTOR DTA114EKA-T146	
Q602	8-729-901-00	TRANSISTOR DTC124EKA-T146	
Q603	8-729-901-00	TRANSISTOR DTC124EKA-T146	
Q604	8-729-901-00	TRANSISTOR DTC124EKA-T146	
Q605	8-729-046-97	TRANSISTOR 2SD1938(F)-T(TX).SO	
Q606	8-729-046-97	TRANSISTOR 2SD1938(F)-T(TX).SO	
Q607	8-729-120-28	TRANSISTOR 2SC2412K-T-146-QR	(S500:AEP,CIS,UK/S800)
Q700	8-729-026-49	TRANSISTOR 2SA1037AK-T146-R	
Q701	8-729-027-23	TRANSISTOR DTA114EKA-T146	
Q702	8-729-024-91	TRANSISTOR 2SC2712-GL-TE85L	
Q703	8-729-024-91	TRANSISTOR 2SC2712-GL-TE85L	
Q704	1-801-806-11	TRANSISTOR DTC144EKA-T146	

Ref. No.	Part No.	Description	Remarks
		< RESISTOR >	
R600	1-216-033-00	METAL CHIP 220 5% 1/10W	(S500:AEP,UK)
R600	1-216-813-11	METAL CHIP 220 5% 1/16W	(EXCEPT S500:AEP,UK)
R601	1-216-033-00	METAL CHIP 220 5% 1/10W	(S500:AEP,UK)
R601	1-216-813-11	METAL CHIP 220 5% 1/16W	(EXCEPT S500:AEP,UK)
R602	1-216-033-00	METAL CHIP 220 5% 1/10W	(S500:AEP,UK)
R602	1-216-813-11	METAL CHIP 220 5% 1/16W	(EXCEPT S500:AEP,UK)
R603	1-216-033-00	METAL CHIP 220 5% 1/10W	(S500:AEP,UK)
R603	1-216-813-11	METAL CHIP 220 5% 1/16W	(EXCEPT S500:AEP,UK)
R604	1-216-033-00	METAL CHIP 220 5% 1/10W	(S500:AEP,UK)
R604	1-216-813-11	METAL CHIP 220 5% 1/16W	(EXCEPT S500:AEP,UK)
R605	1-216-053-00	METAL CHIP 1.5K 5% 1/10W	(S500:AEP,UK)
R605	1-216-823-11	METAL CHIP 1.5K 5% 1/16W	(EXCEPT S500:AEP,UK)
R606	1-216-066-00	METAL CHIP 5.1K 5% 1/10W	(S500:AEP,UK)
R606	1-218-272-11	RES-CHIP 5.1K 5% 1/16W	(EXCEPT S500:AEP,UK)
R607	1-216-066-00	METAL CHIP 5.1K 5% 1/10W	(S500:AEP,UK)
R607	1-218-272-11	RES-CHIP 5.1K 5% 1/16W	(EXCEPT S500:AEP,UK)
R608	1-216-295-00	SHORT 0 (S500:AEP,UK)	
R608	1-216-864-11	METAL CHIP 0 5% 1/16W	(EXCEPT S500:AEP,UK)
R609	1-216-073-00	RES-CHIP 10K 5% 1/10W	(S500:AEP,UK)
R609	1-216-833-11	METAL CHIP 10K 5% 1/16W	(EXCEPT S500:AEP,UK)
R610	1-216-073-00	RES-CHIP 10K 5% 1/10W	(S500:AEP,UK)
R610	1-216-833-11	METAL CHIP 10K 5% 1/16W	(EXCEPT S500:AEP,UK)
R611	1-216-025-11	RES-CHIP 100 5% 1/10W	(S500:AEP,UK)
R611	1-216-809-11	METAL CHIP 100 5% 1/16W	(EXCEPT S500:AEP,UK)
R612	1-216-073-00	RES-CHIP 10K 5% 1/10W	(S500:AEP,UK)
R612	1-216-833-11	METAL CHIP 10K 5% 1/16W	(EXCEPT S500:AEP,UK)
R613	1-216-073-00	RES-CHIP 10K 5% 1/10W	(S500:AEP,UK)
R613	1-216-833-11	METAL CHIP 10K 5% 1/16W	(EXCEPT S500:AEP,UK)
R614	1-216-025-11	RES-CHIP 100 5% 1/10W	(S500:AEP,UK)
R614	1-216-809-11	METAL CHIP 100 5% 1/16W	(EXCEPT S500:AEP,UK)

Ref. No.	Part No.	Description				Remarks
R615	1-216-097-11	RES-CHIP	100K	5%	1/10W	(S500:AEP,UK)
R615	1-216-845-11	METAL CHIP	100K	5%	1/16W	(EXCEPT S500:AEP,UK)
R616	1-216-097-11	RES-CHIP	100K	5%	1/10W	(S500:AEP,UK)
R616	1-216-845-11	METAL CHIP	100K	5%	1/16W	(EXCEPT S500:AEP,UK)
R617	1-216-073-00	RES-CHIP	10K	5%	1/10W	(S500:AEP,UK)
R617	1-216-833-11	METAL CHIP	10K	5%	1/16W	(EXCEPT S500:AEP,UK)
R618	1-216-073-00	RES-CHIP	10K	5%	1/10W	(S500:AEP,UK)
R618	1-216-833-11	METAL CHIP	10K	5%	1/16W	(EXCEPT S500:AEP,UK)
R619	1-216-049-11	RES-CHIP	1K	5%	1/10W	(S500:AEP,UK)
R619	1-216-821-11	METAL CHIP	1K	5%	1/16W	(EXCEPT S500:AEP,UK)
R620	1-216-049-11	RES-CHIP	1K	5%	1/10W	(S500:AEP,UK)
R620	1-216-821-11	METAL CHIP	1K	5%	1/16W	(EXCEPT S500:AEP,UK)
R621	1-216-069-00	METAL CHIP	6.8K	5%	1/10W	(S500:AEP,UK)
R621	1-216-831-11	METAL CHIP	6.8K	5%	1/16W	(EXCEPT S500:AEP,UK)
R622	1-216-073-00	RES-CHIP	10K	5%	1/10W	(S500:AEP,UK)
R622	1-216-833-11	METAL CHIP	10K	5%	1/16W	(EXCEPT S500:AEP,UK)
R623	1-216-049-11	RES-CHIP	1K	5%	1/10W	(S500:AEP,UK)
R623	1-216-821-11	METAL CHIP	1K	5%	1/16W	(EXCEPT S500:AEP,UK)
R624	1-216-089-00	RES-CHIP	47K	5%	1/10W	(S500:AEP,UK)
R624	1-216-841-11	METAL CHIP	47K	5%	1/16W	(EXCEPT S500:AEP,UK)
R625	1-216-073-00	RES-CHIP	10K	5%	1/10W	(S500:AEP,UK)
R625	1-216-833-11	METAL CHIP	10K	5%	1/16W	(EXCEPT S500:AEP,UK)
R626	1-216-069-00	METAL CHIP	6.8K	5%	1/10W	(S500:AEP,UK)
R626	1-216-831-11	METAL CHIP	6.8K	5%	1/16W	(EXCEPT S500:AEP,UK)
R627	1-216-073-00	RES-CHIP	10K	5%	1/10W	(S500:AEP,UK)
R627	1-216-833-11	METAL CHIP	10K	5%	1/16W	(EXCEPT S500:AEP,UK)
R628	1-216-073-00	RES-CHIP	10K	5%	1/10W	(S500:AEP,UK)
R628	1-216-833-11	METAL CHIP	10K	5%	1/16W	(EXCEPT S500:AEP,UK)
R629	1-216-089-00	RES-CHIP	47K	5%	1/10W	(S500:AEP,UK)
R629	1-216-841-11	METAL CHIP	47K	5%	1/16W	(EXCEPT S500:AEP,UK)
R630	1-216-073-00	RES-CHIP	10K	5%	1/10W	(S500:AEP,UK)
R630	1-216-833-11	METAL CHIP	10K	5%	1/16W	(EXCEPT S500:AEP,UK)
R631	1-216-069-00	METAL CHIP	6.8K	5%	1/10W	(S500:AEP,UK)
R631	1-216-831-11	METAL CHIP	6.8K	5%	1/16W	(EXCEPT S500:AEP,UK)
R632	1-216-073-00	RES-CHIP	10K	5%	1/10W	(S500:AEP,UK)
R632	1-216-833-11	METAL CHIP	10K	5%	1/16W	(EXCEPT S500:AEP,UK)
R633	1-216-049-11	RES-CHIP	1K	5%	1/10W	(S500:AEP,UK)
R633	1-216-821-11	METAL CHIP	1K	5%	1/16W	(EXCEPT S500:AEP,UK)
R634	1-216-073-00	RES-CHIP	10K	5%	1/10W	(S500:AEP,UK)
R634	1-216-833-11	METAL CHIP	10K	5%	1/16W	(EXCEPT S500:AEP,UK)
R635	1-216-089-00	RES-CHIP	47K	5%	1/10W	(S500:AEP,UK)
R635	1-216-841-11	METAL CHIP	47K	5%	1/16W	(EXCEPT S500:AEP,UK)
R636	1-216-073-00	RES-CHIP	10K	5%	1/10W	(S500:AEP,UK)
R636	1-216-833-11	METAL CHIP	10K	5%	1/16W	(EXCEPT S500:AEP,UK)
R637	1-216-069-00	METAL CHIP	6.8K	5%	1/10W	(S500:AEP,UK)
R637	1-216-831-11	METAL CHIP	6.8K	5%	1/16W	(EXCEPT S500:AEP,UK)
R638	1-216-073-00	RES-CHIP	10K	5%	1/10W	(S500:AEP,UK)
R638	1-216-833-11	METAL CHIP	10K	5%	1/16W	(EXCEPT S500:AEP,UK)
R639	1-216-089-00	RES-CHIP	47K	5%	1/10W	(S500:AEP,UK)
R639	1-216-841-11	METAL CHIP	47K	5%	1/16W	(EXCEPT S500:AEP,UK)
R640	1-216-073-00	RES-CHIP	10K	5%	1/10W	(S500:AEP,UK)
R640	1-216-833-11	METAL CHIP	10K	5%	1/16W	(EXCEPT S500:AEP,UK)
R641	1-216-025-11	RES-CHIP	100	5%	1/10W	(S500:AEP,UK)
R641	1-216-809-11	METAL CHIP	100	5%	1/16W	(EXCEPT S500:AEP,UK)
R642	1-216-829-11	METAL CHIP	4.7K	5%	1/16W	(S500:AEP,CIS,UK/S800)
R643	1-216-853-11	METAL CHIP	470K	5%	1/16W	(S500:AEP,CIS,UK/S800)
R644	1-216-845-11	METAL CHIP	100K	5%	1/16W	(S500:AEP,CIS,UK/S800)
R645	1-216-821-11	METAL CHIP	1K	5%	1/16W	(S500:AEP,CIS,UK/S800)
R646	1-216-814-11	METAL CHIP	270	5%	1/16W	(S500:AEP,CIS,UK/S800)
R647	1-216-841-11	METAL CHIP	47K	5%	1/16W	(S500:AEP,CIS,UK/S800)

Ref. No.	Part No.	Description				Remarks
R648	1-216-843-11	METAL CHIP	68K	5%	1/16W	(S500:AEP,CIS,UK/S800)
R649	1-216-845-11	METAL CHIP	100K	5%	1/16W	(EXCEPT S500:AEP,UK)
R650	1-216-845-11	METAL CHIP	100K	5%	1/16W	(EXCEPT S500:AEP,UK)
R700	1-216-021-00	METAL CHIP	68	5%	1/10W	(S500:AEP,UK)
R700	1-218-289-11	RES-CHIP	510	5%	1/16W	(EXCEPT S500:AEP,UK)
R701	1-216-021-00	METAL CHIP	68	5%	1/10W	(S500:AEP,UK)
R701	1-218-289-11	RES-CHIP	510	5%	1/16W	(EXCEPT S500:AEP,UK)
R702	1-216-021-00	METAL CHIP	68	5%	1/10W	(S500:AEP,UK)
R702	1-218-289-11	RES-CHIP	510	5%	1/16W	(EXCEPT S500:AEP,UK)
R703	1-216-022-00	METAL CHIP	75	5%	1/10W	(S500:AEP,UK,KR)
R703	1-218-285-11	RES-CHIP	75	5%	1/16W	(EXCEPT S500:AEP,UK)
R704	1-216-022-00	METAL CHIP	75	5%	1/10W	(S500:AEP,UK)
R704	1-218-285-11	RES-CHIP	75	5%	1/16W	(EXCEPT S500:AEP,UK)
R705	1-216-022-00	METAL CHIP	75	5%	1/10W	(S500:AEP,UK)
R705	1-218-285-11	RES-CHIP	75	5%	1/16W	(EXCEPT S500:AEP,UK)
R706	1-216-022-00	METAL CHIP	75	5%	1/10W	(S500:AEP,UK)
R706	1-218-285-11	RES-CHIP	75	5%	1/16W	(EXCEPT S500:AEP,UK)
R707	1-216-022-00	METAL CHIP	75	5%	1/10W	(S500:AEP,UK)
R707	1-218-285-11	RES-CHIP	75	5%	1/16W	(EXCEPT S500:AEP,UK)
R708	1-216-025-11	RES-CHIP	100	5%	1/10W	(S500:AEP,UK)
R708	1-216-809-11	METAL CHIP	100	5%	1/16W	(EXCEPT S500:AEP,UK)
R709	1-216-022-00	METAL CHIP	75	5%	1/10W	(S500:AEP,UK)
R709	1-218-285-11	RES-CHIP	75	5%	1/16W	(EXCEPT S500:AEP,UK)
R711	1-216-081-00	METAL CHIP	22K	5%	1/10W	(S500:AEP,UK)
R711	1-216-837-11	METAL CHIP	22K	5%	1/16W	(EXCEPT S500:AEP,UK)
R712	1-216-049-11	RES-CHIP	1K	5%	1/10W	(S500:AEP,UK)
R712	1-216-821-11	METAL CHIP	1K	5%	1/16W	(EXCEPT S500:AEP,UK)
R713	1-216-081-00	METAL CHIP	22K	5%	1/10W	(S500:AEP,UK)
R713	1-216-837-11	METAL CHIP	22K	5%	1/16W	(EXCEPT S500:AEP,UK)
R714	1-216-073-91	RES-CHIP	10K	5%	1/10W	(S500:AEP,UK)
R714	1-216-833-11	METAL CHIP	10K	5%	1/16W	(EXCEPT S500:AEP,UK)
R716	1-216-037-00	METAL CHIP	330	5%	1/10W	(S500:AEP,UK)
R716	1-216-815-11	METAL CHIP	330	5%	1/16W	(EXCEPT S500:AEP,UK)
R717	1-216-073-91	RES-CHIP	10K	5%	1/10W	(S500:AEP,UK)
R717	1-216-833-11	METAL CHIP	10K	5%	1/16W	(EXCEPT S500:AEP,UK)
R718	1-216-073-00	RES-CHIP	10K	5%	1/10W	(S500:AEP,UK)
R718	1-216-833-11	METAL CHIP	10K	5%	1/16W	(EXCEPT S500:AEP,UK)
R719	1-216-041-00	METAL CHIP	470	5%	1/10W	(S500:AEP,UK)
R719	1-216-817-11	METAL CHIP	470	5%	1/16W	(EXCEPT S500:AEP,UK)
R720	1-216-041-00	METAL CHIP	470	5%	1/10W	(S500:AEP,UK)
R720	1-216-817-11	METAL CHIP	470	5%	1/16W	(EXCEPT S500:AEP,UK)
R721	1-216-073-00	RES-CHIP	10K	5%	1/10W	(S500:AEP,UK)
R721	1-216-833-11	METAL CHIP	10K	5%	1/16W	(EXCEPT S500:AEP,UK)
R722	1-216-073-00	RES-CHIP	10K	5%	1/10W	(S500:AEP,UK)
R722	1-216-833-11	METAL CHIP	10K	5%	1/16W	(EXCEPT S500:AEP,UK)
R723	1-216-073-00	RES-CHIP	10K	5%	1/10W	(S500:AEP,UK)
R723	1-216-833-11	METAL CHIP	10K	5%	1/16W	(EXCEPT S500:AEP,UK)
		< VIBRATOR >				
X601	1-579-242-41	VIBRATOR, CRYSTAL (4.332MHz)				(S500:AEP,CIS,UK/S800)

****

	1-676-599-11	LOADING BOARD
		**********
		< CONNECTOR >
* CN1	1-568-943-11	PIN, CONNECTOR 5P
		< SWITCH >
S1	1-771-799-11	SWITCH, LEVER SLIDE

****

POWER

Ref. No.	Part No.	Description	Remarks
	A-4726-412-A	POWER BOARD, COMPLETE (S500:US)	
		**********	
	A-4726-413-A	POWER BOARD, COMPLETE (S500:CND)	
		**********	
	A-4726-597-A	POWER BOARD, COMPLETE (S500:MX)	
		**********	
	A-4726-829-A	POWER BOARD, COMPLETE (S500:AEP,CIS,UK)	
		**********	
	A-4726-892-A	POWER BOARD, COMPLETE (S500:TW)	
		**********	
	A-4726-899-A	POWER BOARD, COMPLETE (S500:AUS/S800:AUS)	
		**********	
	A-4726-900-A	POWER BOARD, COMPLETE (S500:E32,EA)	
		**********	
	A-4726-909-A	POWER BOARD, COMPLETE (S500:E12,MY,SP,HK,AR)	
		**********	
	A-4726-593-A	POWER BOARD, COMPLETE (S800:AEP,CIS,UK)	
		**********	
	A-4727-401-A	POWER BOARD, COMPLETE (S800:EA)	
		**********	
	A-4727-404-A	POWER BOARD, COMPLETE (S800:HK)	
		**********	
	A-4727-410-A	POWER BOARD, COMPLETE (S800:TW)	
		**********	
	A-4727-602-A	POWER BOARD, COMPLETE (S500:KR/S800:KR)	
		**********	
	A-4727-604-A	POWER BOARD, COMPLETE (S800:MX)	
		**********	
	7-685-548-01	SCREW +BTP 3X12 TYPE1	
	7-685-548-14	SCREW +BTP 3X12 TYPE2 N-S	
	7-685-646-79	SCREW +BVTP 3X8 TYPE2 N-S	
	7-685-546-14	SCREW +BTP 3X8 TYPE2 N-S	
		< CAPACITOR >	
⚠C901	1-117-703-11	CERAMIC 0.0047uF 99% 250V	
⚠C902	1-115-165-11	FILM 0.1uF 20.00% 275V	
⚠C903	1-162-290-31	CERAMIC 470PF 10% 50V	
⚠C904	1-115-165-11	FILM 0.1uF 20.00% 275V	(AEP,CIS,UK,KR)
⚠C904	1-104-705-11	MYLAR 0.1uF 20.00% 250V	(US,CND,MX)
⚠C904	1-113-915-11	CERAMIC 0.001uF 20.00% 250V	(E12,E32,EA,MY,SP,HK,AR,AUS)
⚠C905	1-113-915-11	CERAMIC 0.001uF 20.00% 250V	(EXCEPT US,CND,MX)
⚠C905	1-113-920-11	CERAMIC 0.0022uF 20.00% 250V	(US,CND,MX)
⚠C906	1-113-920-11	CERAMIC 0.0022uF 20.00% 250V	(S500:US,CND,MX)
⚠C906	1-113-915-11	CERAMIC 0.001uF 20.00% 250V	(EXCEPT US,CND,MX)
⚠C907	1-164-159-21	CERAMIC 0.1uF 50V	
⚠C908	1-115-165-11	FILM 0.1uF 20.00% 275V	(AEP,CIS,UK,KR,HK,AUS)
⚠C908	1-113-920-11	CERAMIC 0.0022uF 20.00% 250V	(US,CND,MX)
⚠C908	1-113-915-11	CERAMIC 0.001uF 20.00% 250V	(E12,E32,EA,MY,SP,TW,AR)
⚠C909	1-113-915-11	CERAMIC 0.001uF 20.00% 250V	(E12,E32,EA,MY,SP,HK,TW,AR,AUS)
⚠C910	1-113-915-11	CERAMIC 0.001uF 20.00% 250V	(E12,E32,EA,MY,SP,HK,TW,AR,AUS)
⚠C911	1-113-915-11	CERAMIC 0.001uF 20.00% 250V	(E12,E32,EA,MY,SP,HK,TW,AR,AUS)
⚠C912	1-137-994-11	ELECT 820uF 20% 200V	(US,CND,TW,MX)
⚠C912	1-165-911-21	ELECT 390uF 20% 450V	(EXCEPT US,CND,TW,MX)
⚠C913	1-113-481-11	FILM 1000PF 5.00% 630V	(E12,E32,EA,MY,SP,HK,AR)
⚠C913	1-136-203-11	FILM 10000PF 5.00% 630V	(US,CND,TW,MX,AUS)
⚠C913	1-164-143-11	CERAMIC 0.001uF 10.00% 1KV	(AEP,CIS,UK,KR)
⚠C914	1-126-967-11	ELECT 47uF 20.00% 50V	
⚠C915	1-162-290-31	CERAMIC 470PF 10% 50V	(E12,E32,EA,MY,SP,HK,AR)
⚠C915	1-162-292-31	CERAMIC 680PF 10% 50V	(AEP,CIS,UK,KR)
⚠C915	1-162-286-21	CERAMIC 220PF 10.00% 50V	(US,CND,TW,MX,AUS)
⚠C916	1-125-772-51	CERAMIC 1500PF 10.00% 2KV	(AEP,CIS,UK,KR)
⚠C916	1-117-454-11	FILM 4700PF 5.00% 630V	(US,CND,MX)
⚠C916	1-137-751-21	FILM 2200PF 3% 800V	(E12,E32,EA,MY,SP,HK,TW,AR,AUS)
C917	1-113-907-51	CERAMIC 0.0022uF 99% 250V	
C918	1-115-339-11	CERAMIC CHIP 0.1uF 10.00% 50V	
C919	1-115-789-11	ELECT 1000uF 20.00% 25V	
C920	1-136-203-11	FILM 10000PF 5.00% 630V	(US,CND,TW,MX,AUS)
C920	1-117-454-11	FILM 4700PF 5.00% 630V	(AEP,UK,CIS,E12,E32,EA,MY,SP,HK,KR,AR)
C921	1-115-819-11	ELECT 2200uF 20.00% 35V	(US,CND,MX)
C921	1-110-602-51	ELECT 1800uF 20.00% 25V	(AEP,CIS,UK,KR)
C921	1-110-617-51	ELECT 2200uF 20.00% 50V	(E12,E32,EA,MY,SP,HK,TW,AR,AUS)
C922	1-128-560-11	ELECT 22uF 20.00% 100V	(US,CND,MX)
C922	1-126-965-11	ELECT 22uF 20.00% 50V	(EXCEPT US,CND,MX)
C923	1-115-819-11	ELECT 2200uF 20.00% 35V	(US,CND,MX)
C923	1-110-602-51	ELECT 1800uF 20.00% 25V	(AEP,CIS,UK,KR)
C923	1-110-617-51	ELECT 2200uF 20.00% 50V	(E12,E32,EA,MY,SP,HK,TW,AR,AUS)
C924	1-126-953-11	ELECT 2200uF 20.00% 35V	(US,CND,AEP,UK,KR,MX)
C924	1-126-972-11	ELECT 1000uF 20.00% 50V	(E12,E32,EA,MY,SP,HK,TW,AR,AUS)
C925	1-126-960-11	ELECT 1uF 20.00% 50V	
C926	1-115-339-11	CERAMIC CHIP 0.1uF 10.00% 50V	
C927	1-115-339-11	CERAMIC CHIP 0.1uF 10.00% 50V	
C928	1-126-916-11	ELECT 1000uF 20.00% 6.3V	
C929	1-104-665-11	ELECT 100uF 20.00% 10V	
C930	1-115-339-11	CERAMIC CHIP 0.1uF 10.00% 50V	

The components identified by mark ⚠ or dotted line with mark ⚠ are critical for safety. Replace only with part number specified.	Les composants identifiés par une marque ⚠ sont critiques pour la sécurité. Ne les remplacer que par une pièce portant le numéro spécifié.

POWER

Ref. No.	Part No.	Description	Remarks
C931	1-126-916-11	ELECT 1000uF 20.00% 6.3V	
C932	1-115-339-11	CERAMIC CHIP 0.1uF 10.00% 50V	
C933	1-126-768-11	ELECT 2200uF 20.00% 16V	(US,CND,MX)
C933	1-126-942-61	ELECT 1000uF 20.00% 16V	(EXCEPT US,CND,MX)
C936	1-163-809-11	CERAMIC CHIP 0.047uF 10% 25V	
		< CONNECTOR >	
CN901	1-564-321-00	PIN, CONNECTOR 2P	
* CN902	1-564-321-21	PIN, CONNECTOR 2P	(US,CND,AEP,CIS,UK,KR,MX)
CN902	1-564-321-00	PIN, CONNECTOR 2P	(EXCEPT US,CND,AEP,CIS,UK,KR,MX)
* CN904	1-564-778-11	PLUG, CONNECTOR (2.5MM) 4P	
* CN905	1-568-939-11	PIN, CONNECTOR 12P	
		< DIODE >	
⚠ D901	8-719-911-19	DIODE 1SS133T-72 (AEP,CIS,UK,KR)	
⚠ D901	8-719-991-33	DIODE 1SS133T-77 (EXCEPT AEP,CIS,UK,KR)	
⚠ D902	8-719-022-92	DIODE RBV-604 (US,CND,TW,MX,AUS)	
⚠ D902	8-719-312-05	DIODE RBV-606 (AEP,CIS,UK,KR)	
⚠ D902	8-719-510-53	DIODE RBV-406H-01	(E12,E32,EA,HK,MY,SP,AR)
⚠ D903	8-719-010-98	DIODE MTZJ-T-77-22A (US,CND,MX)	
⚠ D903	8-719-922-03	DIODE MTZJ-T-77-18C (EXCEPT US,CND,MX)	
⚠ D904	8-719-110-61	DIODE MTZJ-T-77-24A	
⚠ D905	8-719-200-91	DIODE 11EQS10-TA1	
⚠ D906	8-719-200-91	DIODE 11EQS10-TA1	
⚠ D907	8-719-200-91	DIODE 11EQS10-TA1	
⚠ D908	8-719-080-26	DIODE SARS01V0	
D909	8-719-079-46	DIODE FMB-G14L	
D910	8-719-200-91	DIODE 11EQS10-TA1	
D911	8-719-313-14	DIODE FML-22S (US,CND,AEP,UK,KR,MX)	
D912	8-719-110-42	DIODE MTZJ-T-77-15C	
D913	8-719-404-50	DIODE MA111-TX	
D914	8-719-210-21	DIODE 11EQS04-TA1B	
D915	8-719-404-50	DIODE MA111-TX	
D916	8-719-210-21	DIODE 11EQS04-TA1B	
D917	8-719-200-82	DIODE 11ES2-NTA1B	
D918	8-719-404-50	DIODE MA111-TX	
D920	1-216-296-11	SHORT 0 (US,CND,MX)	
D921	1-216-296-11	SHORT 0 (US,CND,MX)	
		< EARTH >	
⚠ EB901	1-537-770-21	TERMINAL BOARD, GROUND	
⚠ EB902	1-537-770-21	TERMINAL BOARD, GROUND	
⚠ EB903	1-537-770-21	TERMINAL BOARD, GROUND (MX)	
		< FERRITE BEAD >	
⚠ FB901	1-412-473-21	INDUCTOR 0uH	
		< FUSE >	
⚠ F901	1-533-420-11	FUSE, GLASS CYLINDRICAL(DIA.5) 5A/125V	(US,CND,MX)
⚠ F901	1-533-471-11	FUSE, GLASS TUBE (DIA. 5T) 3.15A/250V	(EXCEPT US,CND,MX)
		< FUSE HOLDER >	
FH901	1-533-313-11	HOLDER, FUSE	
FH902	1-533-313-11	HOLDER, FUSE	
		< IC >	
⚠ IC901	8-749-017-79	IC STR-F6676 (AEP,CIS,UK,KR)	
⚠ IC901	6-700-162-01	IC STR-F6426S (US,CND,MX)	
IC902	6-700-388-01	IC SE-B2	
IC903	6-700-812-01	IC SI-8050JF	
IC904	8-759-332-29	IC M51945BL	
IC905	8-759-450-47	IC BA05T	
IC906	6-700-813-01	IC SI-8033JF	
IC907	8-759-390-72	IC TC4S584F(TE85R)	(US,CND,AEP,CIS,UK,KR,MX)
IC907	8-759-257-96	IC TC7S14FU(TE85R)	(E12,E32,EA,MY,SP,HK,TW,AR,AUS)
		< COIL >	
L901	1-424-860-11	INDUCTOR 10uH	(US,CND,AEP,CIS,UK,KR,MX)
L901	1-419-505-11	INDUCTOR 10uH	(E12,E32,EA,MY,SP,HK,TW,AR,AUS)
L902	1-419-506-11	INDUCTOR 150uH (AEP,CIS,UK,KR)	
L902	1-419-253-11	INDUCTOR 100uH	(US,CND,E12,E32,EA,MY,SP,HK,TW,MX,AR,AUS)
L903	1-419-506-11	INDUCTOR 150uH (AEP,CIS,UK,KR)	
L903	1-419-253-11	INDUCTOR 100uH	(US,CND,E12,E32,EA,MY,SP,HK,TW,MX,AR,AUS)
L904	1-414-398-11	INDUCTOR 10uH	
L905	1-414-398-11	INDUCTOR 10uH	
L906	1-414-398-11	INDUCTOR 10uH	
L907	1-414-398-11	INDUCTOR 10uH	
L908	1-414-398-11	INDUCTOR 10uH	
		< LINE FILTER >	
⚠ LF901	1-424-930-11	COIL, LINE FILTER (US,CND,MX)	
		< TRANSISTOR >	
⚠ Q901	8-729-119-76	TRANSISTOR 2SA1175TP-HFE	
⚠ Q902	8-729-140-04	TRANSISTOR 2SB1116A-TP-LK	
⚠ Q903	8-729-111-29	TRANSISTOR 2SD1616A-TP-LK	
Q905	8-729-900-53	TRANSISTOR DTC114EKA-T146	
Q906	8-729-900-53	TRANSISTOR DTC114EKA-T146	
Q907	8-729-030-19	TRANSISTOR 2SB1640(TP)	(US,CND,AEP,CIS,UK,KR,MX)
Q907	8-729-209-60	TRANSISTOR 2SB1375	(E12,E32,EA,MY,SP,HK,TW,AR,AUS)
Q908	8-729-900-53	TRANSISTOR DTC114EKA-T146	
Q909	8-729-027-49	TRANSISTOR DTC123EKA-T146	
Q910	8-729-900-53	TRANSISTOR DTC114EKA-T146	
Q911	8-729-900-53	TRANSISTOR DTC114EKA-T146	(US,CND,MX)
Q915	8-729-027-23	TRANSISTOR DTA114EKA-T146 (TW,AUS)	
Q915	8-729-900-53	TRANSISTOR DTC114EKA-T146	(EXCEPT TW,AUS)

The components identified by mark ⚠ or dotted line with mark ⚠ are critical for safety. Replace only with part number specified.	Les composants identifiés par une marque ⚠ sont critiques pour la sécurité. Ne les remplacer que par une pièce portant le numéro spécifié.

POWER

Ref. No.	Part No.	Description				Remarks
		< PHOTO COUPLER >				
⚠PC901	8-749-019-04	PHOTO COUPLER TLP421				
⚠PC902	8-749-019-04	PHOTO COUPLER TLP421				
		< RESISTOR >				
⚠R900	1-219-237-11	SOLID	3.3M	20%	1/2W	(US,CND,MX)
⚠R900	1-202-725-00	SOLID	3.3M	10%	1/2W	(TW,AUS)
⚠R901	1-249-415-11	CARBON	680	5%	1/4W	F
⚠R902	1-216-361-31	METAL OXIDE	0.22	5%	2W	(AEP,CIS,UK)
⚠R902	1-243-979-31	METAL OXIDE	0.1	5%	2W	(US,CND,MX)
⚠R903	1-216-361-31	METAL OXIDE	0.22	5%	2W	(AEP,CIS,UK)
⚠R903	1-243-979-31	METAL OXIDE	0.1	5%	2W	(US,CND,MX)
⚠R904	1-247-881-00	CARBON	120K	5%	1/4W	
⚠R905	1-249-439-11	CARBON	68K	5%	1/4W	
⚠R906	1-249-424-11	CARBON	3.9K	5%	1/4W	F
⚠R907	1-249-425-11	CARBON	4.7K	5%	1/4W	F
⚠R908	1-215-878-00	METAL OXIDE	33K	5%	1W	(US,CND,MX)
⚠R908	1-215-901-00	METAL OXIDE	33K	5%	2W	(TW,AUS)
⚠R908	1-215-904-11	METAL OXIDE	100K	5%	2W	(AEP,CIS,UK,E12,E32,EA,MY,SP,HK,KR,AR)
⚠R909	1-247-887-00	CARBON	220K	5%	1/4W	(E12,E32,EA,MY,SP,HK,TW,AR,AUS)
⚠R909	1-260-127-11	CARBON	220K	5%	1/2W	(US,CND,AEP,CIS,UK,KR,MX)
⚠R910	1-215-884-31	METAL OXIDE	47	5%	2W	(US,CND,MX)
⚠R910	1-215-884-11	METAL OXIDE	47	5%	2W	(TW,AUS)
⚠R910	1-215-909-11	METAL OXIDE	47	5%	3W	(E12,E32,EA,MY,SP,HK,AR)
⚠R911	1-249-425-11	CARBON	4.7K	5%	1/4W	F (US,CND,AEP,CIS,UK,TW,KR,MX,AUS)
⚠R911	1-249-426-11	CARBON	5.6K	5%	1/4W	(E12,E32,EA,MY,SP,HK,AR)
⚠R912	1-249-428-11	CARBON	8.2K	5%	1/4W	F (E12,E32,EA,MY,SP,HK,AR)
⚠R912	1-249-426-11	CARBON	5.6K	5%	1/4W	(US,CND,AEP,CIS,UK,TW,KR,MX,AUS)
⚠R913	1-249-385-11	CARBON	2.2	5%	1/6W	F (E12,E32,EA,MY,SP,HK,TW,AR,AUS)
⚠R913	1-249-399-11	CARBON	33	5%	1/4W	F (US,CND,AEP,CIS,UK,KR,MX)
R914	1-216-829-11	METAL CHIP	4.7K	5%	1/16W	
R915	1-216-826-11	METAL CHIP	2.7K	5%	1/16W	
R916	1-249-420-11	CARBON	1.8K	5%	1/4W	F (E12,E32,EA,MY,SP,HK,TW,AR,AUS)
R916	1-249-421-11	CARBON	2.2K	5%	1/4W	F (US,CND,AEP,CIS,UK,KR,MX)
R917	1-249-420-11	CARBON	1.8K	5%	1/4W	F (US,CND,MX)
R917	1-249-422-11	CARBON	2.7K	5%	1/4W	F (EXCEPT US,CND,MX)
R918	1-215-884-11	METAL OXIDE	47	5%	2W	(US,CND,MX)
R919	1-249-429-11	CARBON	10K	5%	1/4W	(US,CND,AEP,CIS,UK,KR,MX)
R919	1-249-433-11	CARBON	22K	5%	1/4W	(TW,AUS)
R919	1-249-436-11	CARBON	39K	5%	1/4W	(E12,E32,EA,MY,SP,HK,AR)
R920	1-249-427-11	CARBON	6.8K	5%	1/4W	F (E12,E32,EA,MY,SP,HK,AR)
R920	1-249-433-11	CARBON	22K	5%	1/4W	(US,CND,AEP,CIS,UK,TW,KR,MX,AUS)
R921	1-216-853-11	METAL CHIP	470K	5%	1/16W	(US,CND,MX)
R921	1-216-851-11	METAL CHIP	330K	5%	1/16W	(AEP,CIS,UK,KR)
R921	1-216-857-11	METAL CHIP	1M	5%	1/16W	(E12,E32,EA,MY,SP,HK,TW,AR,AUS)
R922	1-216-841-11	METAL CHIP	47K	5%	1/16W	(E12,E32,EA,MY,SP,HK,TW,AR,AUS)
R922	1-216-844-11	METAL CHIP	82K	5%	1/16W	(AEP,CIS,UK,KR)
R922	1-216-843-11	METAL CHIP	68K	5%	1/16W	(US,CND,MX)
R923	1-216-833-11	METAL CHIP	10K	5%	1/16W	
R924	1-216-818-11	METAL CHIP	560	5%	1/16W	(US,CND,AEP,CIS,UK,KR,MX)
R925	1-216-812-11	METAL CHIP	180	5%	1/16W	(AEP,CIS,UK,KR)
R925	1-216-811-11	METAL CHIP	150	5%	1/16W	(US,CND,MX)
R925	1-216-823-11	METAL CHIP	1.5K	5%	1/16W	(E12,E32,EA,MY,SP,HK,TW,AR,AUS)
R926	1-216-825-11	METAL CHIP	2.2K	5%	1/16W	
R927	1-215-865-11	METAL OXIDE	220	5%	1W	(US,CND,MX)
R927	1-249-417-11	CARBON	1K	5%	1/4W	F (E12,E32,EA,MY,SP,HK,TW,AR,AUS)
R928	1-216-837-11	METAL CHIP	22K	5%	1/16W	(EXCEPT US,CND,MX)
R928	1-216-841-11	METAL CHIP	47K	5%	1/16W	(US,CND,MX)
R929	1-216-809-11	METAL CHIP	100	5%	1/16W	
R932	1-216-847-11	METAL CHIP	150K	5%	1/16W	(EXCEPT US,CND,MX)
R932	1-216-848-11	METAL CHIP	180K	5%	1/16W	(US,CND,MX)
R933	1-216-841-11	METAL CHIP	47K	5%	1/16W	
R934	1-216-836-11	METAL CHIP	18K	5%	1/16W	(E12,E32,EA,MY,SP,HK,TW,AR,AUS)
R934	1-216-837-11	METAL CHIP	22K	5%	1/16W	(US,CND,AEP,CIS,UK,KR,MX)

The components identified by mark ⚠ or dotted line with mark ⚠ are critical for safety. Replace only with part number specified.	Les composants identifiés par une marque ⚠ sont critiques pour la sécurité. Ne les remplacer que par une pièce portant le numéro spécifié.

Ref. No.	Part No.	Description			Remarks
		< TRANSFORMER >			
⚠T901	1-437-414-11	TRANSFORMER, POWER (S500:US,CND,MX)			
⚠T901	1-437-415-11	TRANSFORMER, POWER (EXCEPT US,CND,MX)			
		< THERMISTOR >			
⚠TH901	1-803-916-11	THERMISTOR, NTC			
**********					
	1-681-994-11	PW-1030 BOARD			
		**********			
		< DIODE >			
D812	8-719-071-44	DIODE SELS5223C-TP15 (POWER)			
		< RESISTOR >			
R804	1-216-827-11	METAL CHIP	3.3K	5%	1/16W
**********					
	A-4726-850-A	RF-240 BOARD, COMPLETE			
		**********			
		< CAPACITOR >			
C001	1-162-970-11	CERAMIC CHIP	0.01uF	10%	25V
C002	1-162-970-11	CERAMIC CHIP	0.01uF	10%	25V
C005	1-162-966-11	CERAMIC CHIP	0.0022uF	10%	50V
C006	1-162-966-11	CERAMIC CHIP	0.0022uF	10%	50V
C007	1-162-966-11	CERAMIC CHIP	0.0022uF	10%	50V
C008	1-162-966-11	CERAMIC CHIP	0.0022uF	10%	50V
C009	1-124-779-00	ELECT CHIP	10uF	20%	16V
C015	1-162-968-11	CERAMIC CHIP	0.0047uF	10%	50V
C016	1-162-968-11	CERAMIC CHIP	0.0047uF	10%	50V
C017	1-126-206-11	ELECT CHIP	100uF	20%	6.3V
C018	1-115-416-11	CERAMIC CHIP	0.001uF	5.00%	25V
C019	1-164-739-11	CERAMIC CHIP	560PF	5.00%	50V
C021	1-124-779-00	ELECT CHIP	10uF	20%	16V
C022	1-107-826-11	CERAMIC CHIP	0.1uF	10.00%	16V
C023	1-126-206-11	ELECT CHIP	100uF	20%	6.3V
C024	1-115-416-11	CERAMIC CHIP	0.001uF	5.00%	25V
C025	1-107-826-11	CERAMIC CHIP	0.1uF	10.00%	16V
C026	1-162-970-11	CERAMIC CHIP	0.01uF	10%	25V
C027	1-162-970-11	CERAMIC CHIP	0.01uF	10%	25V
C028	1-162-970-11	CERAMIC CHIP	0.01uF	10%	25V
C031	1-107-826-11	CERAMIC CHIP	0.1uF	10.00%	16V
C032	1-107-826-11	CERAMIC CHIP	0.1uF	10.00%	16V
C033	1-162-964-11	CERAMIC CHIP	0.001uF	10%	50V
C034	1-162-970-11	CERAMIC CHIP	0.01uF	10%	25V
C035	1-107-826-11	CERAMIC CHIP	0.1uF	10.00%	16V
C036	1-165-176-11	CERAMIC CHIP	0.047uF	10.00%	16V
C038	1-165-176-11	CERAMIC CHIP	0.047uF	10.00%	16V
C039	1-162-970-11	CERAMIC CHIP	0.01uF	10%	25V
C040	1-164-217-11	CERAMIC CHIP	150PF	5.00%	50V
C043	1-107-826-11	CERAMIC CHIP	0.1uF	10.00%	16V
C044	1-124-779-00	ELECT CHIP	10uF	20%	16V
C046	1-162-970-11	CERAMIC CHIP	0.01uF	10%	25V
C047	1-107-826-11	CERAMIC CHIP	0.1uF	10.00%	16V
C048	1-162-970-11	CERAMIC CHIP	0.01uF	10%	25V

Ref. No.	Part No.	Description			Remarks
		< CONNECTOR >			
CN001	1-766-835-11	CONNECTOR, FFC/FPC (ZIF) 26P			
CN002	1-784-875-21	CONNECTOR,FFC(LIF(NON-ZIF))25P			
		< DIODE >			
D001	8-719-988-61	DIODE 1SS355TE-17			
D004	8-719-988-61	DIODE 1SS355TE-17			
		< IC >			
IC001	8-759-828-02	IC SP3728AC			
		< COIL >			
L001	1-412-031-11	INDUCTOR CHIP	47uH		
L002	1-412-031-11	INDUCTOR CHIP	47uH		
		< TRANSISTOR >			
Q001	8-729-903-46	TRANSISTOR	2SB1132-T100-QR		
Q002	8-729-903-46	TRANSISTOR	2SB1132-T100-QR		
		< RESISTOR >			
R002	1-216-809-11	METAL CHIP	100	5%	1/16W
R003	1-216-809-11	METAL CHIP	100	5%	1/16W
R005	1-216-845-11	METAL CHIP	100K	5%	1/16W
R006	1-216-838-11	METAL CHIP	27K	5%	1/16W
R007	1-216-803-11	METAL CHIP	33	5%	1/16W
R008	1-216-803-11	METAL CHIP	33	5%	1/16W
R009	1-216-821-11	METAL CHIP	1K	5%	1/16W
R010	1-216-841-11	METAL CHIP	47K	5%	1/16W
R011	1-216-809-11	METAL CHIP	100	5%	1/16W
R020	1-216-803-11	METAL CHIP	33	5%	1/16W
R023	1-216-803-11	METAL CHIP	33	5%	1/16W
R025	1-216-841-11	METAL CHIP	47K	5%	1/16W
R029	1-216-809-11	METAL CHIP	100	5%	1/16W
R037	1-216-834-11	METAL CHIP	12K	5%	1/16W
R038	1-216-861-11	METAL CHIP	2.2M	5%	1/16W
R045	1-216-809-11	METAL CHIP	100	5%	1/16W
**********					
	1-681-995-11	RR-1030 BOARD			
		**********			
		< CAPACITOR >			
C808	1-162-970-11	CERAMIC CHIP	0.01uF	10%	25V
		< IC >			
IC101	8-759-827-70	IC NJL64H400A-1 R			
		< RESISTOR >			
R815	1-216-805-11	METAL CHIP	47	5%	1/16W
**********					

The components identified by mark ⚠ or dotted line with mark ⚠ are critical for safety. Replace only with part number specified.	Les composants identifiés par une marque ⚠ sont critiques pour la sécurité. Ne les remplacer que par une pièce portant le numéro spécifié.

RR-1030 **SW(A)-1030** **SW(B)-1030**

Ref. No.	Part No.	Description			Remarks
	1-681-992-11	SW (A)-1030 BOARD			
		**********			
		< CONNECTOR >			
CN810	1-506-481-11	PIN, CONNECTOR 2P			
		< RESISTOR >			
R800	1-216-829-11	METAL CHIP	4.7K	5%	1/16W
R801	1-216-832-11	METAL CHIP	8.2K	5%	1/16W
R802	1-216-835-11	METAL CHIP	15K	5%	1/16W
R803	1-216-841-11	METAL CHIP	47K	5%	1/16W
		< SWITCH >			
S801	1-762-875-21	SWITCH, KEYBOARD (■)			
S802	1-762-875-21	SWITCH, KEYBOARD (❚❚)			
S803	1-762-875-21	SWITCH, KEYBOARD (PRESET+ / NEXT ▶▶❙)			
S804	1-762-875-21	SWITCH, KEYBOARD (▷)			
S805	1-762-875-21	SWITCH, KEYBOARD (PRESET- / PREV ❙◀◀)			
**********					
	1-681-993-11	SW (B)-1030 BOARD			
		**********			
		< CONNECTOR >			
CN812	1-506-481-11	PIN, CONNECTOR 2P			
		< SWITCH >			
S806	1-762-875-21	SWITCH, KEYBOARD (OPEN/CLOSE ≙)			
**********					

Ref. No.	Part No.	Description	Remarks
		MISCELLANEOUS	
		**********	
⚠7	1-690-608-11	CORD, POWER (E12,E32,AUS)	
⚠7	1-696-169-21	CORD, POWER (AEP,CIS,UK,EA,MY,SP,HK,TW)	
⚠7	1-769-079-21	CORD, POWER (KR)	
⚠7	1-775-789-91	CORD, POWER (MX)	
⚠7	1-783-532-11	CORD, POWER (US,CND)	
⚠7	1-783-941-21	CORD, POWER (AR)	
65	1-823-076-11	CABLE, FLEXIBLE FLAT (15 CORE)	
69	1-786-210-11	SWITCH, POWER (S500)	
101	A-4726-404-A	TUNER UNIT (US,CND)	
101	A-4726-588-A	TUNER UNIT (AEP,CIS,UK,KR,TW,AUS)	
101	A-4726-594-A	TUNER UNIT (MX)	
101	A-4726-905-A	TUNER UNIT (E12,E32,EA,HK,SP,MY,AR)	
102	1-823-082-11	CABLE, FLEXIBLE FLAT (13 CORE)	
104	1-823-079-11	CABLE, FLEXIBLE FLAT (29 CORE)	
105	1-823-074-11	CABLE, FLEXIBLE FLAT (9 CORE)	
111	1-823-075-11	CABLE, FLEXIBLE FLAT (12 CORE)	
112	1-823-353-11	CABLE, FLEXIBLE FLAT (17 CORE)	
114	1-823-354-11	CABLE, FLEXIBLE FLAT (25 CORE)	
⚠419	8-820-144-06	DEVICE,OPTICAL KHM-240AAA	
420	1-823-072-11	CABLE, FLEXIBLE FLAT 26P	
421	1-823-073-11	CABLE, FLEXIBLE FLAT (9 CORE)	
M901	A-2004-893-A	MOTOR (LD) ASSY	
		**********	
		HARDWARE LIST	
		**********	
#1	7-685-646-79	SCREW +BVTP 3X8 TYPE2 N-S	
#2	7-685-548-14	SCREW +BTP 3X12 TYPE2 N-S	
#3	7-685-533-19	SCREW +BTP 2.6X6 TYPE2 N-S	

The components identified by mark ⚠ or dotted line with mark ⚠ are critical for safety. Replace only with part number specified.	Les composants identifiés par une marque ⚠ sont critiques pour la sécurité. Ne les remplacer que par une pièce portant le numéro spécifié.

MEMO

REVISION HISTORY

Clicking the version allows you to jump to the revised page.
Also, clicking the version at the upper right on the revised page allows you to jump to the next revised page.

Ver.	Date	Description of Revision
1.0	2001.08	New
1.1	2002.01	Correction of 6.5V line in AMP board schematic diagam Correction of Ref. No. Q903 in POWER board schematic diagram and electrical parts list (SPM-02003)
1.2	2002.05	Correction of Ref. No. D909 in POWER board schematic diagram and electrical parts list (SPM-02023)
1.3	2002.07	Addition of model identification Correction of Ref. No. D806, D807, D808, D809, D810 and R874 in DDCON-1030 board schematic diagram and electrical parts list (SPM-02048)
1.4	2002.11	Correction of Ref. No. Q002 (SPM-02103) Correction of Ref. No. CN700 (SPM-02104) Correction of Ref. No. C912 (SPM-02105)
1.5	2003.05	Addition of "CHECKING OF OPERATIONS WITH REMOTE COMMANDERS OF DIFFERENT MODELS" (SPM-03001) Addition of "TEST DISC LIST" and servo adjustment note (SPM-03008) Addition of Ref. No. 116 (SPM-03012)
1.6	2003.07	Correction of "TEST DISC LIST" (SPM-03070)
1.7	2004.01	Correction of Ref.No.116 (SPM-03134)
1.8	2004.08	Addition of note of replacing the DVD board (SPM-04038)

SS-WS500

SERVICE MANUAL

Ver 1.0 2001. 07

US Model
Canadian Model
AEP Model
UK Model
E Model
Australian Model
Chinese Model

- SS-WS500 is the speaker system in DAV-C700/S500.

SPECIFICATIONS

Speaker system	Bass reflex
Speaker unit	180 mm (7 1/8 inches) dia. cone type
Rated impedance	3 ohms
Dimensions (approx.)	200 × 390 × 355 mm (7 7/8 × 15 3/8 × 14 inches) (w/h/d)
Mass (approx.)	6.4 kg (14 lb 13 oz)

Design and specifications are subject to change without notice.

EXPLODED VIEW AND PARTS LIST

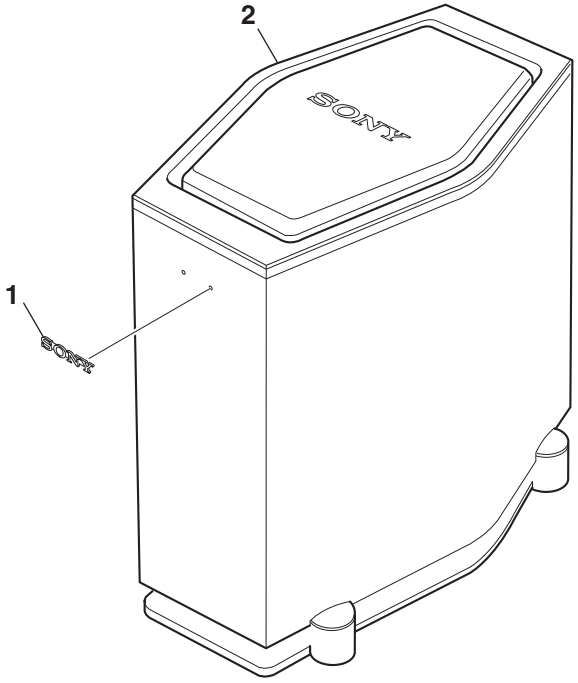

Ref. No.	Part No.	Description	Remarks
1	4-949-384-11	EMBLEM (NO.6), SONY	
2	A-4735-210-A	SPEAKER CABINET ASSY	

SPEAKER SYSTEM

9-873-247-01
2001G1600-1
© 2001.7

Sony Corporation
Home Audio Company
Shinagawa Tec Service Manual Production Group

SONY®

REVISION HISTORY

Clicking the version allows you to jump to the revised page.
Also, clicking the version at the upper right on the revised page allows you to jump to the next revised page.

Ver.	Date	Description of Revision
1.0	2001.07	New

SS-RS500/TS500

SERVICE MANUAL

Ver 1.2 2002. 03

US Model
Canadian Model
AEP Model
UK Model
E Model
Australian Model
Chinese Model

- SS-RS500/TS500 are speaker systems in DAV-C700/S500.

SPECIFICATIONS

SS-TS500

Speaker system	Bass reflex
Speaker unit	70 mm (2 7/8 inches) dia. cone type, 15 mm (5/8 inches) dia. balance dome
Rated impedance	6 ohms
Dimensions (approx.)	100 × 100 × 110 mm (4 × 4 × 4 3/8 inches) (w/h/d)
Mass (approx.)	0.86 kg (2 lb 9 oz)

SS-RS500

Speaker system	Bass reflex
Speaker unit	70 mm (2 7/8 inches) dia. cone type
Rated impedance	6 ohms
Dimensions (approx.)	100 × 100 × 110 mm (4 × 4 × 4 3/8 inches) (w/h/d)
Mass (approx.)	0.85 kg (2 lb 6 oz)

Design and specifications are subject to change without notice.

EXPLODED VIEW AND PARTS LIST

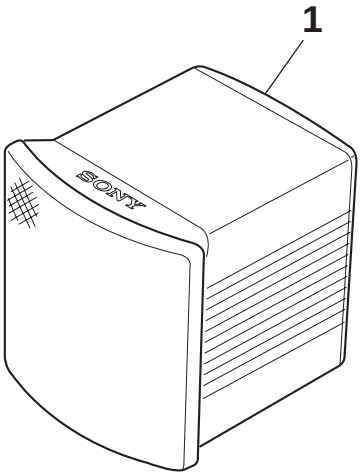

Ref. No.	Part No.	Description	Remarks
1	A-4330-689-A	SS-TS500SVX (SS-TS500 SERVICE PART)	
1	A-4330-690-A	SS-RS500SVX (SS-RS500 SERVICE PART)	

SPEAKER SYSTEM

9-873-243-03
2002C1600-1

© 2002.03

Sony Corporation
Home Audio Company
Published by Sony Engineering Corporation

SONY®

REVISION HISTORY

Clicking the version allows you to jump to the revised page.
Also, clicking the version at the upper right on the revised page allows you to jump to the next revised page.

Ver.	Date	Description of Revision
1.0	2001.07	New
1.1	2001.09	Correction of exploded view and parts list. (ENG-01002)
1.2	2002.03	Supply from changed (SPM-02008)

SS-RS500/TS500

SERVICE MANUAL

Ver 1.2 2002. 03

US Model
Canadian Model
AEP Model
UK Model
E Model
Australian Model
Chinese Model

- SS-RS500/TS500 are speaker systems in DAV-C700/S500.

SPECIFICATIONS

SS-TS500

Speaker system	Bass reflex
Speaker unit	70 mm (2 7/8 inches) dia. cone type, 15 mm (5/8 inches) dia. balance dome
Rated impedance	6 ohms
Dimensions (approx.)	100 × 100 × 110 mm (4 × 4 × 4 3/8 inches) (w/h/d)
Mass (approx.)	0.86 kg (2 lb 9 oz)

SS-RS500

Speaker system	Bass reflex
Speaker unit	70 mm (2 7/8 inches) dia. cone type
Rated impedance	6 ohms
Dimensions (approx.)	100 × 100 × 110 mm (4 × 4 × 4 3/8 inches) (w/h/d)
Mass (approx.)	0.85 kg (2 lb 6 oz)

Design and specifications are subject to change without notice.

EXPLODED VIEW AND PARTS LIST

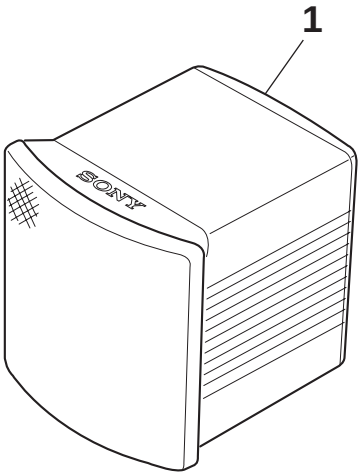

Ref. No.	Part No.	Description	Remarks
1	A-4330-689-A	SS-TS500SVX (SS-TS500 SERVICE PART)	
1	A-4330-690-A	SS-RS500SVX (SS-RS500 SERVICE PART)	

SPEAKER SYSTEM

9-873-243-03
2002C1600-1

© 2002.03

Sony Corporation
Home Audio Company
Published by Sony Engineering Corporation

SONY®

REVISION HISTORY

Clicking the version allows you to jump to the revised page.
Also, clicking the version at the upper right on the revised page allows you to jump to the next revised page.

Ver.	Date	Description of Revision
1.0	2001.07	New
1.1	2001.09	Correction of exploded view and parts list. (ENG-01002)
1.2	2002.03	Supply from changed (SPM-02008)